HIGHWAY 427 EXPANSION

DCR # 4

E.3 Stormwater Management Ponds

Ontario

January 31, 2019

link427

LOCAL | INTEGRATED | NEIGHBOURLY | KNOWLEDGEABLE

GENERAL

1. SEE NSSP FOR FURTHER DIRECTIONS DURING CONSTRUCTION.

GRUBBING

1. ENVIRONMENTAL PROTECTION MEASURES WILL BE SUPERVISED AND INSPECTED AS REQUIRED DURING CONSTRUCTION.
2. IN THE EVENT THAT ADJACENT VEGETATION COMMUNITIES OR PLANTED TREES ARE ACCIDENTALLY DAMAGED DURING CONSTRUCTION ACTIVITIES, THE CONTRACTOR SHALL ENSURE THAT APPROPRIATE CONTINGENCY MEASURES ARE IMPLEMENTED SUCH AS PRUNING TREE LIMBS OR ROOTS THAT ARE ACCIDENTALLY DAMAGED USING PROPER ARBORICULTURAL TECHNIQUES.
3. NO VEGETATION REMOVAL IS ALLOWED IN DESIGNATED BAT HABITAT AREA, UNTIL THE ESA PERMIT FOR SAR IS OBTAINED.
4. CLEARING AND GRUBBING IS NOT PERMITTED WITHIN THE MIGRATORY BIRD NESTING PERIOD (APRIL 15 – AUGUST 15) UNLESS A NEST SEARCH HAS BEEN COMPLETED IN ACCORDANCE WITH THE ENVIRONMENTAL OBLIGATIONS. IF NO NESTS ARE FOUND, CLEARING AND GRUBBING IS PERMITTED WITHIN THE MIGRATORY BIRD NESTING PERIOD. THE EXCEPTION BEING AT THE RAINBOW CREEK (RAIN–3 & RAIN–5) AND WEST ROBINSON CREEK (ROB–5 AND ROB–6) CROSSINGS WHERE GIVEN THE COMPLEXITY OF THE HABITAT PRESENT, NEST SEARCHES WILL NOT BE PERMITTED AND VEGETATION REMOVAL MUST FOLLOW THE MIGRATORY BIRD NESTING PERIOD AND/OR SAR BAT PERIOD.

CONTROLLED CONSTRUCTION VEHICLE ACCESS

1. CONSTRUCTION VEHICLE ACCESS WILL BE LIMITED TO EXISTING ROADWAYS AND CONSTRUCTION PATHS, AWAY FROM THE IDENTIFIED NATURAL AREAS AND THEIR RECOMMENDED BUFFERS.
2. RESTRICT EARTH MOVEMENT IMMEDIATELY ADJACENT TO WOODLANDS DURING PERIODS OF HIGH DUST GENERATION. DUST SUPPRESSANTS WILL BE APPLIED DURING DRY PERIODS TO THOSE AREAS WHICH GENERATE EXCESSIVE DUST.

INVASIVE SPECIES MANAGEMENT

1. A NUMBER OF INVASIVE SPECIES ARE PRESENT WITHIN THE ALIGNMENT FOOTPRINT. THE CONTRACTOR RESPONSIBLE FOR IMPLEMENTING INVASIVE SPECIES MANAGEMENT AS PER THE INVASIVE SPECIES MANAGEMENT PROGRAM.
2. EQUIPMENT WORKING IN THE IDENTIFIED INVASIVE SPECIES LOCATIONS WILL BE THOROUGHLY CLEANED PRIOR TO MOVING FROM THE SITE. SOIL REMOVED FROM SITES WITH A HIGH INCIDENCE OF INVASIVE SPECIES WILL BE BURIED BELOW IMPERVIOUS SURFACES (E.G. ROAD) AND WILL NOT BE RE–USED FOR ANY VEGETATION RESTORATION SITES UNLESS IT IS PLACED IN AN AREA THAT WILL BE ACTIVELY AND REGULARLY MANAGED.
3. ALL EQUIPMENT AND MACHINERY REQUIRE INSPECTION AND CLEANING INCLUDING, BUT NOT LIMITED TO: CARS, TRUCKS, ATV'S, TRACTORS, MOWERS, SLASHERS, TRAILERS, BACKHOES, GRADERS, DOZERS, EXCAVATORS, SKIDDERS, LOADERS, AND WATER TANKERS.
4. EQUIPMENT IS TO BE CLEANED IN AN AREA WHERE CONTAMINATION AND SEED SPREAD IS NOT POSSIBLE (OR IS LIMITED). THE SITE SHOULD BE:
   A) A HARD SURFACE, GRAVEL SURFACE, OR MOWN GRASSY AREA,
   B) GENTLY SLOPING TO ASSIST DRAINING WATER AND MATERIAL IN MOVING AWAY FROM THE EQUIPMENT (WATER SHOULD RUN BACK INTO THE AREA WHERE CONTAMINATION OCCURRED),
   C) AT LEAST 30M AWAY FROM ANY WATERCOURSE, WATERBODY, AND NATURAL VEGETATION, AND
   D) LARGE ENOUGH TO ALLOW FOR ADEQUATE MOVEMENT OF LARGE EQUIPMENT.

TIMING RESTRICTIONS

1. ANY INSTREAM WORKS AND WORK ON WATERCOURSE BANKS SHALL BE CONDUCTED DURING THE APPROPRIATE WARMWATER CONSTRUCTION TIMING (JULY 1 TO MARCH 31) TO PROTECT THE RESIDENT WARMWATER FISH COMMUNITIES PRESENT AT WATERCOURSE CROSSINGS BOTH DIRECT AND INDIRECT.
2. ALL CONDITIONS OUTLINED IN THE OVERALL BENEFIT BAT SAR PERMIT (# AU–C–011–16) WILL BE IMPLEMENTED, AND WILL BE DONE SO IN ACCORDANCE WITH TIMING REQUIREMENTS OUTLINED THEREIN.

EROSION AND SEDIMENT CONTROL (ESC)

1. EROSION AND SEDIMENT CONTROL (ESC) INSPECTION WILL BE UNDERTAKEN DURING CONSTRUCTION ACTIVITIES BY AN ENVIRONMENTAL INSPECTOR UNTIL THE WORK IS COMPLETED AND THE SITE IS STABILIZED.
2. ESC MEASURES WILL BE IMPLEMENTED PRIOR TO GRUBBING AND GRADING OPERATIONS, AND MAINTAINED IN EFFECTIVE WORKING ORDER UNTIL THE SITE IS STABLE, TO PREVENT ENTRY OF SEDIMENT INTO ANY WATERCOURSE, WETLAND OR RETAINED NATURAL AREA.
3. ESC INSPECTIONS WILL OCCUR WEEKLY AS WELL AS PRIOR TO AND FOLLOWING RAIN/SNOWMELT EVENTS. ESC MEASURES WILL BE CLEANED OUT, REPAIRED AND/OR REPLACED.
4. ALL EXPOSED SOILS AND NEWLY CONSTRUCTED SURFACES WILL BE STABILIZED WITHIN 15 DAYS (IN "HIGH RISK" AREAS, 45 DAYS ELSEWHERE) OF COMPLETING THE WORK OR IF THERE IS NO ACTIVITY FOR 15 (15 "HIGH RISK", 45 ELSEWHERE) DAYS USING THE APPROPRIATE MEANS IN ACCORDANCE WITH THE CHARACTERISTICS OF THE SOIL MATERIAL AND SLOPE CONDITIONS BY METHODS SUCH AS HYDRO–SEEDING, SODDING, POLYMER SOIL STABILIZERS/TACIFIERS, RIP RAP, MULCH, GEOTEXTILES, EROSION CONTROL BLANKETS, ETC.
5. EROSION AND SEDIMENT CONTROL FOR DIFFERENT PHASES OF CONSTRUCTION FOR IDENTIFIED WATERCROSSINGS SHALL BE AS SHOWN IN THE CONSTRUCTION PERIOD DRAINAGE AND SEDIMENT MANAGEMENT PLANS (DSMPs).
6. DITCHES AND CULVERTS WILL BE INSTALLED PRIOR TO OTHER CONSTRUCTION TO ENSURE STORMWATER IS DIRECTED TO TEMPORARY SEDIMENT TRAPS OR PONDS.
7. DITCHES WILL BE SEEDED AS SOON AS POSSIBLE AFTER CONSTRUCTION.
8. ALL ESC MEASURES WILL BE FIELD FIT.

MATERIAL / DEBRIS STORAGE

1. TREE/SHRUB DEBRIS WILL BE STORED IN SPECIALLY IDENTIFIED TREE STORAGE AREAS OUTSIDE OF THE IDENTIFIED VEGETATION COMMUNITIES, NATURAL HERITAGE FEATURES (I.E., VALLEY SLOPES, WETLANDS, WATERCOURSES, ETC.) AND VEGETATION AND WILDLIFE RESTORATION SITES.
2. THERE SHALL BE NO STORAGE OF MATERIALS WITHIN ADJACENT NATURAL AREAS.

WATERCOURSE

1. ALL CONSTRUCTION ACTIVITIES, INCLUDING MAINTENANCE PROCEDURES, WILL BE CONTROLLED TO PREVENT THE ENTRY OF PETROLEUM PRODUCTS, DEBRIS, RUBBLE, CONCRETE OR OTHER DELETERIOUS SUBSTANCES INTO THE WATER. VEHICULAR REFUELING AND MAINTENANCE WILL BE CONDUCTED A MINIMUM OF 30 METRES FROM THE WATERCOURSES.
2. DEWATERING ACTIVITIES SHALL BE CONDUCTED IN ACCORDANCE WITH CONTROL PROCEDURES AS SPECIFIED IN OPSS 517 (DEWATERING). APPROPRIATE DEWATERING MEASURES SHALL BE IMPLEMENTED TO MANAGE ANY GROUNDWATER ENCOUNTERED DURING GRADING ACTIVITIES, AND DEWATERING DISCHARGE WATER WILL BE FILTERED AS NECESSARY TO PREVENT TRANSPORT OF SEDIMENT TO NATURAL SURFACE WATER RECEPTORS.
3. NO EQUIPMENT OR VEHICLES ARE PERMITTED TO CROSS THROUGH THE WATERCOURSES AT ANY TIME.
4. FOR ALL WORK AROUND WATERCOURSES, REFER TO THEIR ESCP/DSMP.

WILDLIFE

1. ANY WILDLIFE INCIDENTALLY ENCOUNTERED DURING CONSTRUCTION WILL NOT BE KNOWINGLY HARMED.
2. SIGHTINGS OF UNKNOWN OR UNCOMMON SPECIES, DENS, OR NESTS MUST BE REPORTED TO THE ENVIRONMENTAL INSPECTOR IMMEDIATELY.
3. DO NOT HARASS, INJURE, OR KILL ANY FORM OF WILDLIFE.
4. WILDLIFE MUST BE ALLOWED TO DISPERSE FROM ROADS OR RIGHT–OF–WAY.
5. REPORT ANY DEAD OR INJURED WILDLIFE TO THE ENVIRONMENTAL INSPECTOR.
6. DURING CONSTRUCTION OF WILDLIFE ENHANCEMENT AND COMPENSATION MEASURES, NO HEAVY EQUIPMENT SHALL BE USED IN EXISTING FOREST COMMUNITIES AND RIPARIAN AREAS THAT HAVE BEEN IDENTIFIED FOR PROTECTION.

NO.	DATE	REVISIONS	BY	CHK	LEAD. DISC.	PROJ. MAN.
A	19/01/25	90% SUBMISSION TO CA	M.E.	D.C.	J.M.	P.B.

SCALE :

CONSULTANT			
DESIGNED	IMRAN AHMAD		
DRAWN	MICHAEL ETINGEN		
CHECKED	DUNCAN CAMPBELL		
APPROVED LEAD ENGINEER	JONATHAN MOHACSI		
APPROVED PROJ. MANAGER	PETER BAMFORTH		
	NAME (PRINT)	INIT.	DATE

Ontario

link427 LOCAL | INTEGRATED | NEIGHBOURLY | KNOWLEDGEABLE

HWY 427 EXPANSION

ENVIRONMENTAL NOTES

PROJECT ID.	STAGE INDENTIFIER	DESIGN PACKAGE NUMBER	DISCIPLINE	STRUCTURE NUMBER	DOCUMENT TYPE	DRAWING NUMBER	REVISION NUMBER
H427–D	N	6	GEN	000	DWG	0003	A

SUPPLEMENTAL LEGEND

RIGHT OF WAY, FENCES, ETC.

- RIGHT OF WAY (ROW)
- ROW – TEMPORARY LIMITED INTEREST (TLI)
- FUTURE TRANSITWAY ROW
- CHAIN LINK FENCE (TOP WIRE) ON RIGHT OF WAY (OPSD 972.130)
- HEAVY DUTY SILT FENCE BARRIER (OPSD 219.130)
- TURBIDITY CURTAIN (OPSD 219.260)
- TREE PROTECTION
- GATE (OPSD 972 SERIES)

DRAINAGE

- STORM SEWER
- 150mmø SUBDRAIN
- CATCH BASIN / DITCH INLET, MANHOLE
- TWIN INLET CATCH BASIN / MANHOLE
- CATCH BASIN, MANHOLE TO BE ADUSTED
- CULVERT
- CULVERT WITH HEADWALL
- FLOW CHECK DAM
  OPSD 219.211 – TEMPORARY ROCK (DURING CONSTRUCTION)
  OPSD 219.180 – PERMANENT STRAW BALE
- FLOW CHECKS & RIP RAP AT DITCH INLETS
  OPSD 219.180 – STRAW BALE FLOW CHECK
  OPSD 810.020 – RIP RAP TREATMENT
- FLOW ARROW
- V-TYPE DITCH
- FLAT BOTTOM DITCH

NEW CONSTRUCTION

- SIDEWALK / MULTI-USE PATH
- RETAINING WALL
- STEEL BEAM GUIDERAIL
- CONCRETE BARRIER
- CONCRETE CURB AND GUTTER
- GUTTER OUTLET 45° WITH ASPHALT SPILLWAY
- STEEL BEAM ENERGY ATTENUATING TERMINAL (SBEAT) / ENERGY ATTENUATOR PERMANENT (EAP)
- EARTH FILLS RAISED BENCH
- EARTH CUTS RAISED BENCH
- CUTS AND FILLS (EARTH)
- RIP-RAP (SEE WAT DRAWINGS FOR CULVERT INFO)
- SEED & EROSION CONTROL BLANKET (USED ON SLOPES STEEPER THAN 3:1)
- MISCELLANEOUS ASPHALT PAVING
- HIGH MAST LIGHT POLE APRON

MISCELLANEOUS

- EPZ1 — ENVIRONMENTAL PROTECTION ZONE 1
- EPZ2 — ENVIRONMENTAL PROTECTION ZONE 2

REMOVALS

- TREE TO BE GRUBBED
- TREE/VEGETATION GRUBBING
- CC&G / CONC. BARRIER — CONCRETE CURB & GUTTER OR CONCRETE BARRIER TO BE REMOVED
- SBGR — GUIDE RAIL TO BE REMOVED
- WF/CLF — FENCE TO BE REMOVED
- CSP — CULVERT TO BE REMOVED
- GATE — GATE TO BE REMOVED
- CB/DI MH — CB, DI, MH TO BE REMOVED
- REMOVAL OF ASPHALT PAVEMENT, FULL DEPTH
- REMOVAL OF ASPHALT PAVEMENT, PARTIAL DEPTH
- CONCRETE REMOVAL
- REMOVAL OF ASPHALT PAVEMENT ON STRUCTURE

STAGING

- FLEXIBLE DELINEATOR POSTS
- TC-54 (TRAFFIC CONTROL BARRELS)
- TEMPORARY CONCRETE BARRIER (TCB) (INCLUDING DELINEATORS/REFLECTORS)
- ENERGY ATTENUATOR
- WORK ZONE / UNDER CONSTRUCTION
- UNDER CONSTRUCTION TEMPORARY
- NIGHT CLOSURE CONSTRUCTION
- COMPLETED CONSTRUCTION
- COMPLETED CONSTRUCTION TEMPORARY
- CONSTRUCTION INGRESS / EGRESS
- NO. OF LANES / TRAFFIC FLOW

PAVEMENT MARKING

1	SOLID YELLOW,10cm
2	SOLID DOUBLE YELLOW,10cm
3	363 BROKEN YELLOW,10cm
4	SOLID YELLOW,20cm
5	SOLID WHITE,10cm
6	333 BROKEN WHITE,10cm
7	363 BROKEN WHITE,10cm
8	393 BROKEN WHITE,10cm
9	SOLID WHITE,20cm
10	111 BROKEN WHITE,20cm
11	333 BROKEN WHITE,20cm
12	333 BROKEN WHITE,30cm
13	SOLID WHITE,30cm
14	SOLID WHITE,45cm
15	SOLID WHITE,60cm
20	SYMBOLS
] [	LIMITS OF MARKINGS
	HOV LANE SYMBOL

PAVEMENT MARKING (DETOUR ORANGE)

21	SOLID ORANGE,10cm
22	SOLID DOUBLE ORANGE,10cm
23	363 BROKEN ORANGE,10cm
24	SOLID ORANGE,20cm
25	SOLID ORANGE,10cm
26	333 BROKEN ORANGE,10cm
27	363 BROKEN ORANGE,10cm
28	393 BROKEN ORANGE,10cm
29	SOLID ORANGE,20cm
30	111 BROKEN ORANGE,20cm
31	333 BROKEN ORANGE,20cm
32	333 BROKEN ORANGE,30cm
33	SOLID ORANGE,30cm
34	SOLID ORANGE,45cm
40	SYMBOLS
] [	LIMITS OF MARKINGS

*NOTE: ORANGE PMK FOR FREEWAY ONLY.

NOTES:
1. 333, 363, 393, Denotes Pavement Marking Spacing (ie., 3 m line, 3 m gap, 3 m line)
2. Use (1) to Denote PAVEMENT MARKING
3. Use [1] to Denote PAVEMENT MARKING, TEMPORARY
4. Use △1 to Denote PAVEMENT MARKING, TEMPORARY–REMOVABLE
5. Use ⟨1⟩ to Denote PAVEMENT MARKING, DURABLE

TRAFFIC SIGN

- EXISTING GROUND MOUNTED SIGN
- SINGLE POST GROUND MOUNTED SIGN
- DOUBLE POSTS GROUND MOUNTED SIGN

PRELOADING

- TOP OF TEMPORARY BERM BARRIER (OPSD 219.231)
- SETTLEMENT ROD (SR)

NO.	DATE	REVISIONS	BY	CHK	LEAD. DISC.	PROJ. MAN.
A	19/01/25	90% SUBMISSION TO CA	E.L.	D.C.	J.M.	P.B.

SCALE : N.T.S

CONSULTANT

	NAME (PRINT)	INIT.	DATE
DESIGNED			
DRAWN	EDDY LEUNG		
CHECKED	DUNCAN CAMPBELL		
APPROVED LEAD ENGINEER	JONATHAN MOHACSI		
APPROVED PROJ. MANAGER	PETER BAMFORTH		

Ontario

link427 — LOCAL | INTEGRATED | NEIGHBOURLY | KNOWLEDGEABLE

HWY 427 EXPANSION

SUPPLEMENTAL LEGEND
HIGHWAY 427 MAINLINE

PROJECT ID.	STAGE IDENTIFIER	DESIGN PACKAGE NUMBER	DISCIPLINE	STRUCTURE NUMBER	DOCUMENT TYPE	DRAWING NUMBER	REVISION NUMBER
H427–D	N	6	GEN	000	DWG	0010	A

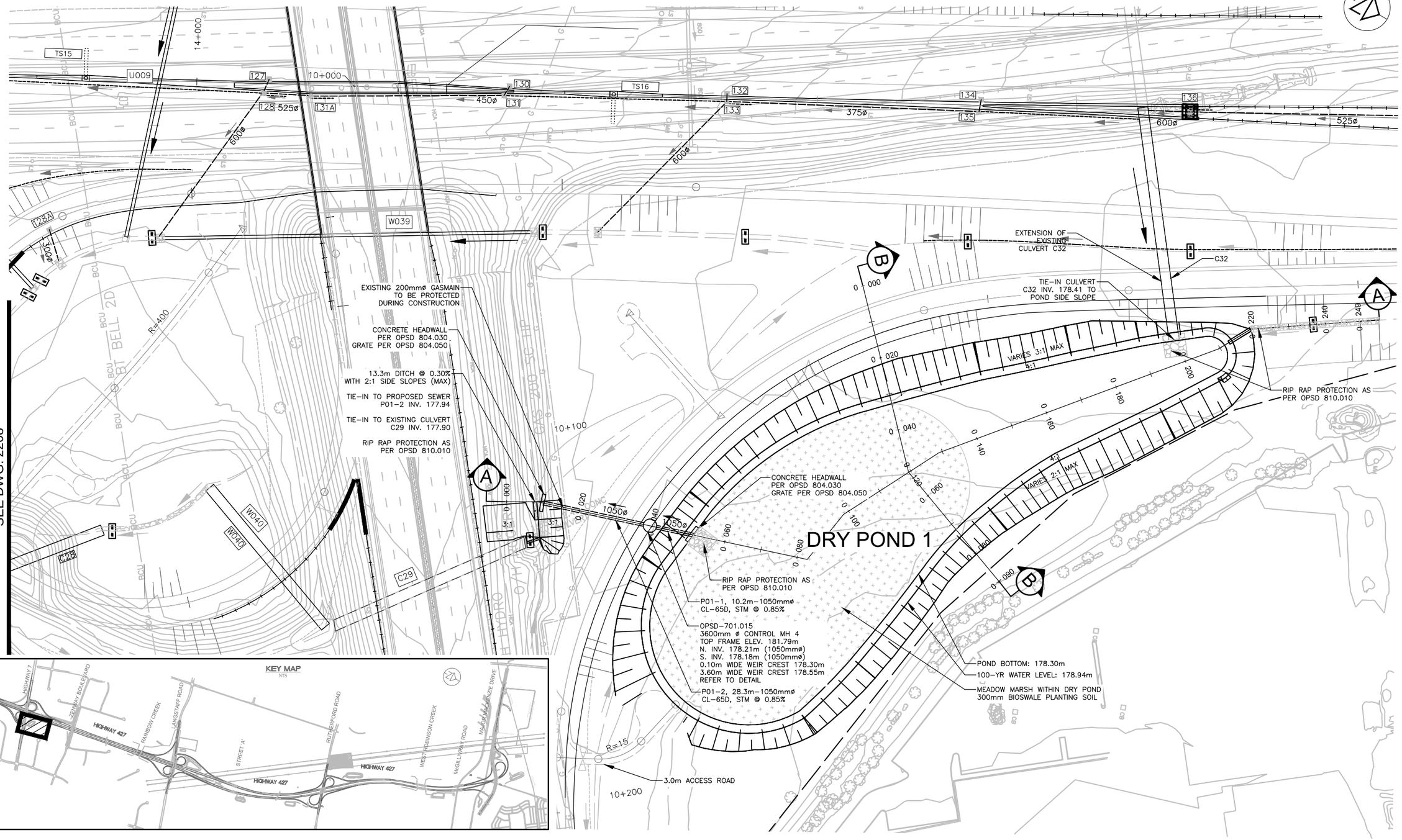

NO.	DATE	REVISIONS	BY	CHK	LEAD. DISC.	PROJ. MAN.
A	19/01/25	90% SUBMISSION TO CA				

SCALE :

5m 0 10m

Metres HORIZONTAL

CONSULTANT

	NAME (PRINT)	INIT.	DATE
DESIGNED	JUAN LOPEZ		
DRAWN	JAMIE HUANG-HADI ABBASI		
CHECKED	JUAN LOPEZ		
APPROVED LEAD ENGINEER	JUAN LOPEZ		
APPROVED PROJ. MANAGER	PETER BAMFORTH		

Ontario

link427

LOCAL | INTEGRATED | NEIGHBOURLY | KNOWLEDGEABLE

TITLE

HWY 427 EXPANSION

DRY POND 1

STATION 9+600

PROJECT ID.	STAGE INDENTIFIER	DESIGN PACKAGE NUMBER	DISCIPLINE	STRUCTURE NUMBER	DOCUMENT TYPE	DRAWING NUMBER	REVISION NUMBER
H427-D	F	6	WAT	000	DWG	2200	A

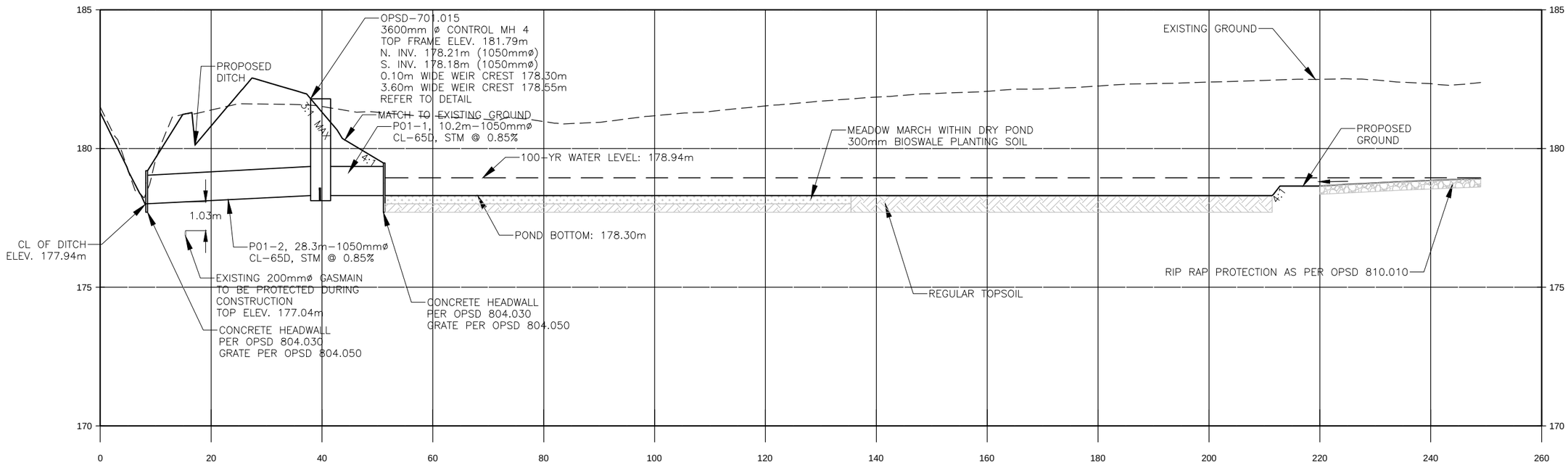

Pond 1 A-A

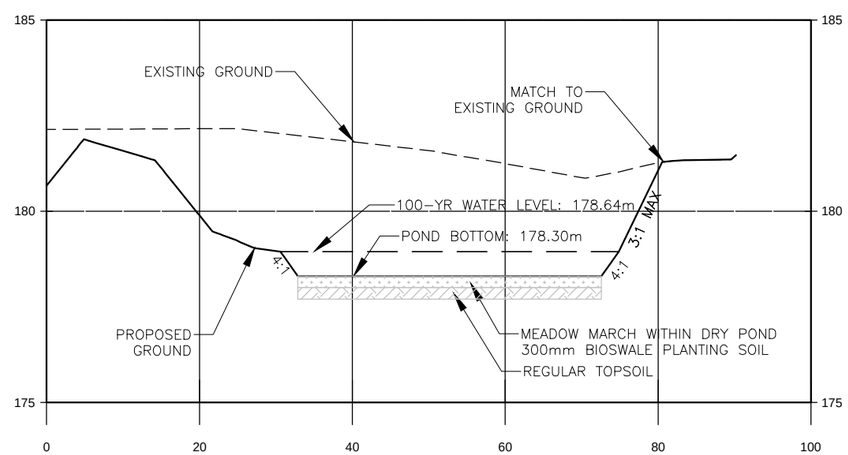

Pond 1 B-B

NO.	DATE	REVISIONS	BY	CHK	LEAD. DISC.	PROJ. MAN.
A	19/01/25	90% SUBMISSION TO CA				

SCALE :

1m 0 2m — Metres VERTICAL

5m 0 10m — Metres HORIZONTAL

CONSULTANT

	NAME (PRINT)	INIT.	DATE
DESIGNED	JUAN LOPEZ		
DRAWN	JAMIE HUANG-HADI ABBASI		
CHECKED	JUAN LOPEZ		
APPROVED LEAD ENGINEER	JUAN LOPEZ		
APPROVED PROJ. MANAGER	PETER BAMFORTH		

Ontario

link427 — LOCAL | INTEGRATED | NEIGHBOURLY | KNOWLEDGEABLE

TITLE

HWY 427 EXPANSION
POND SECTION
DRY POND 1
STATION 9+600

PROJECT ID.	STAGE INDENTIFIER	DESIGN PACKAGE NUMBER	DISCIPLINE	STRUCTURE NUMBER	DOCUMENT TYPE	DRAWING NUMBER	REVISION NUMBER
H427-D	F	6	WAT	000	DWG	2201	A

SEE DWG. 2210

N-E/W RAMP

U034

RIP RAP PROTECTION AS PER OPSD 810.010

REGIONAL WATER LEVEL: 180.70m

A50, 16.0m– 900mm CULVERT @ 0.44%

A49

OPSD–701.013
2400mmø CONTROL MH 46
TOP FRAME ELEV. 180.70m
N. INV. 178.46m (1200mmø)
S. INV. 178.40m (1200mmø)
N. INV. 177.60m (200mmø)
2.40m WIDE WEIR CREST 179.20m
C/W 200mmø ORIFICE INV. 178.46m
200mmø BACKWATER VALVE INV. 177.60m
REFER TO DETAIL

3.0m ACCESS ROAD

MEADOW MARSH WITHIN DRY POND
300mm BIOSWALE
PLANTING SOIL

P02–1, 10.5m– 1200mmø @0.4%

RIP RAP PROTECTION AS PER OPSD 810.010

DRY POND 2

P02–2, 125.0m– 1200mmø @ 0.3%

REGIONAL WATER LEVEL: 180.70m

U033

FLOW DIVERSION BERM
TOP ELV. 179.65m

POND BOTTOM: 178.50m
100–YR WATER LEVEL: 179.65m
FREEBOARD: 180.10m

RIP RAP PROTECTION AS PER OPSD 810.010

A44

U035

A04

A46, 17.0m– 1800mm x 1200mm BOX CULVERT @ 0.30%

REGIONAL WATER LEVEL: 180.70m

REGIONAL WATER LEVEL: 180.70m

A=45

KEY MAP
NTS

HIGHWAY 7
ZENWAY BOULEVARD
HIGHWAY 427
RAINBOW CREEK
LANGSTAFF ROAD
STREET 'A'
RUTHERFORD ROAD
WEST ROBINSON CREEK
MCGILLIVRAY ROAD
MAJOR MACKENZIE DRIVE

A37

SBL

℄ HIGHWAY 427

A=376.79
R=250
R=300

A40

NO.	DATE	REVISIONS	BY	CHK	LEAD. DISC.	PROJ. MAN.
A	19/01/25	90% SUBMISSION TO CA				

SCALE :
5m 0 10m
Metres
HORIZONTAL

CONSULTANT

	NAME (PRINT)	INIT.	DATE
DESIGNED	JUAN LOPEZ		
DRAWN	JAMIE HUANG–HADI ABBAS		
CHECKED	JUAN LOPEZ		
APPROVED LEAD ENGINEER	JUAN LOPEZ		
APPROVED PROJ. MANAGER	PETER BAMFORTH		

Ontario

link427
LOCAL | INTEGRATED | NEIGHBOURLY | KNOWLEDGEABLE

TITLE
HWY 427 EXPANSION
DRY POND 2
STATION 12+300

PROJECT ID.	STAGE IDENTIFIER	DESIGN PACKAGE NUMBER	DISCIPLINE	STRUCTURE NUMBER	DOCUMENT TYPE	DRAWING NUMBER	REVISION NUMBER
H427–D	F	6	WAT	000	DWG	2202	A

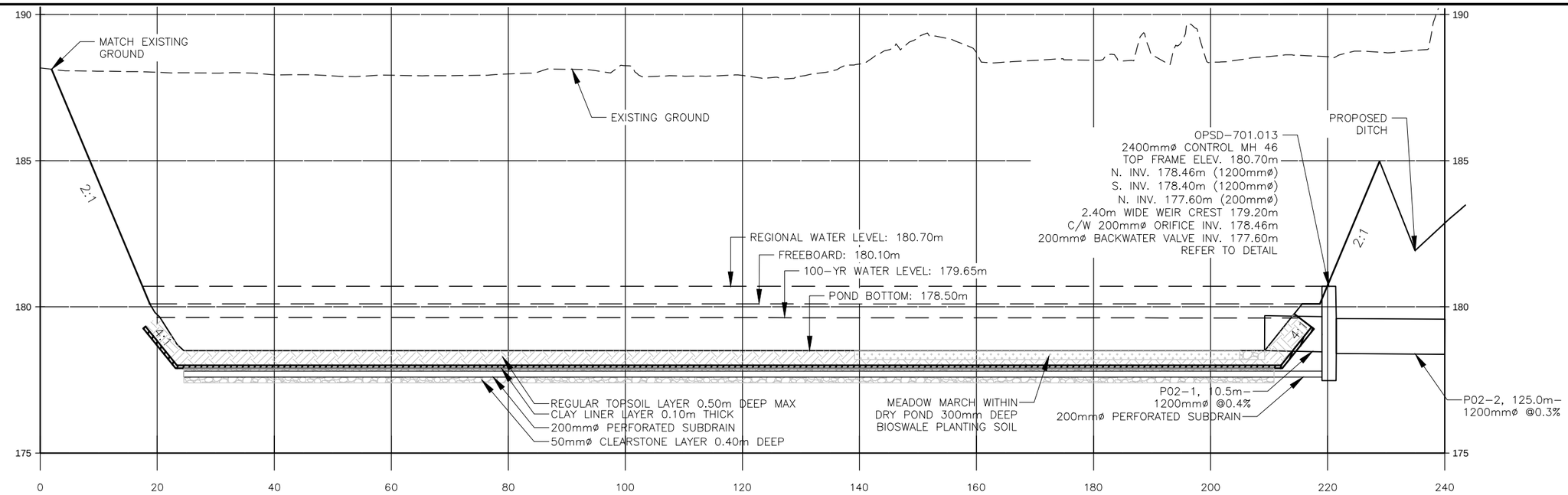

Pond 2 A–A

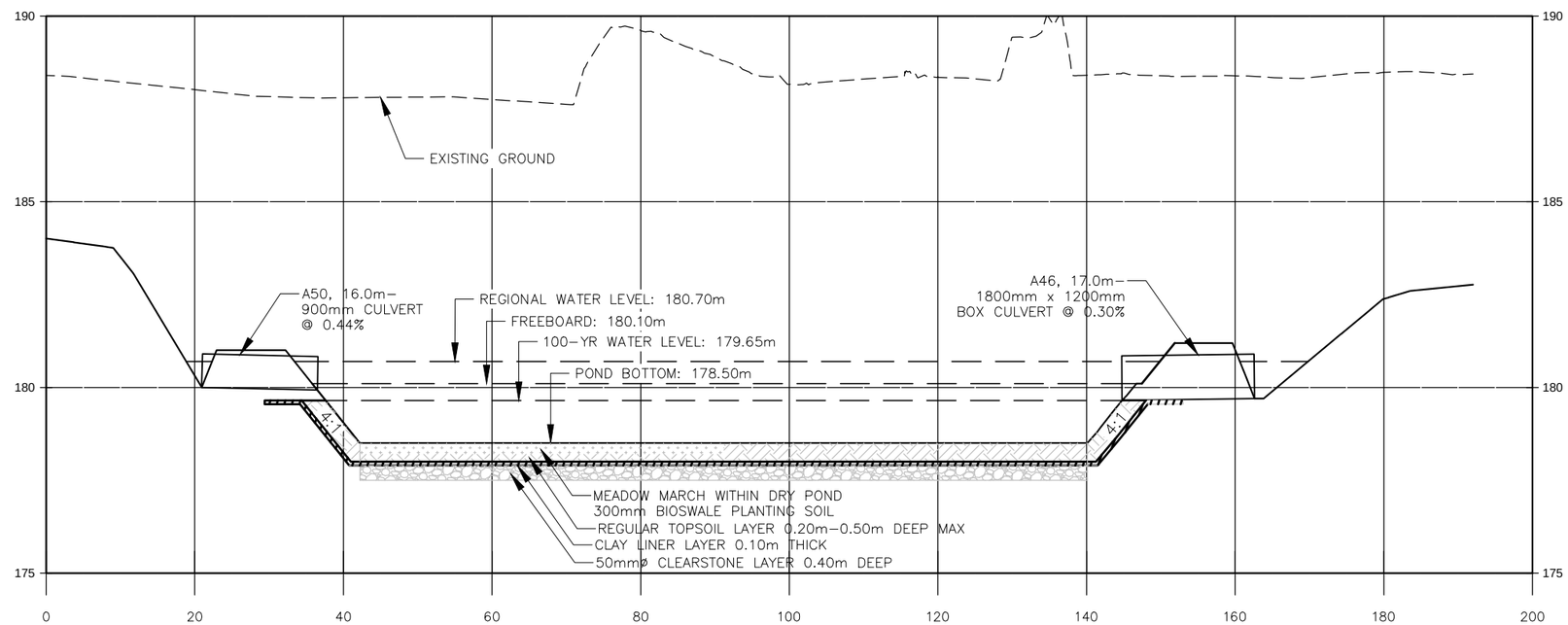

Pond 2 A–A

NO.	DATE	REVISIONS	BY	CHK	LEAD. DISC.	PROJ. MAN.
A	19/01/25	90% SUBMISSION TO CA				

SCALE :

1m 0 2m — Metres VERTICAL

5m 0 10m — Metres HORIZONTAL

CONSULTANT

	NAME (PRINT)	INIT.	DATE
DESIGNED	JUAN LOPEZ		
DRAWN	JAMIE HUANG-HADI ABBASI		
CHECKED	JUAN LOPEZ		
APPROVED LEAD ENGINEER	JUAN LOPEZ		
APPROVED PROJ. MANAGER	PETER BAMFORTH		

Ontario

link427 — LOCAL | INTEGRATED | NEIGHBOURLY | KNOWLEDGEABLE

TITLE

HWY 427 EXPANSION
POND SECTION
DRY POND 2
STATION 12+300

PROJECT ID.	STAGE INDENTIFIER	DESIGN PACKAGE NUMBER	DISCIPLINE	STRUCTURE NUMBER	DOCUMENT TYPE	DRAWING NUMBER	REVISION NUMBER
H427-D	F	6	WAT	000	DWG	2203	A

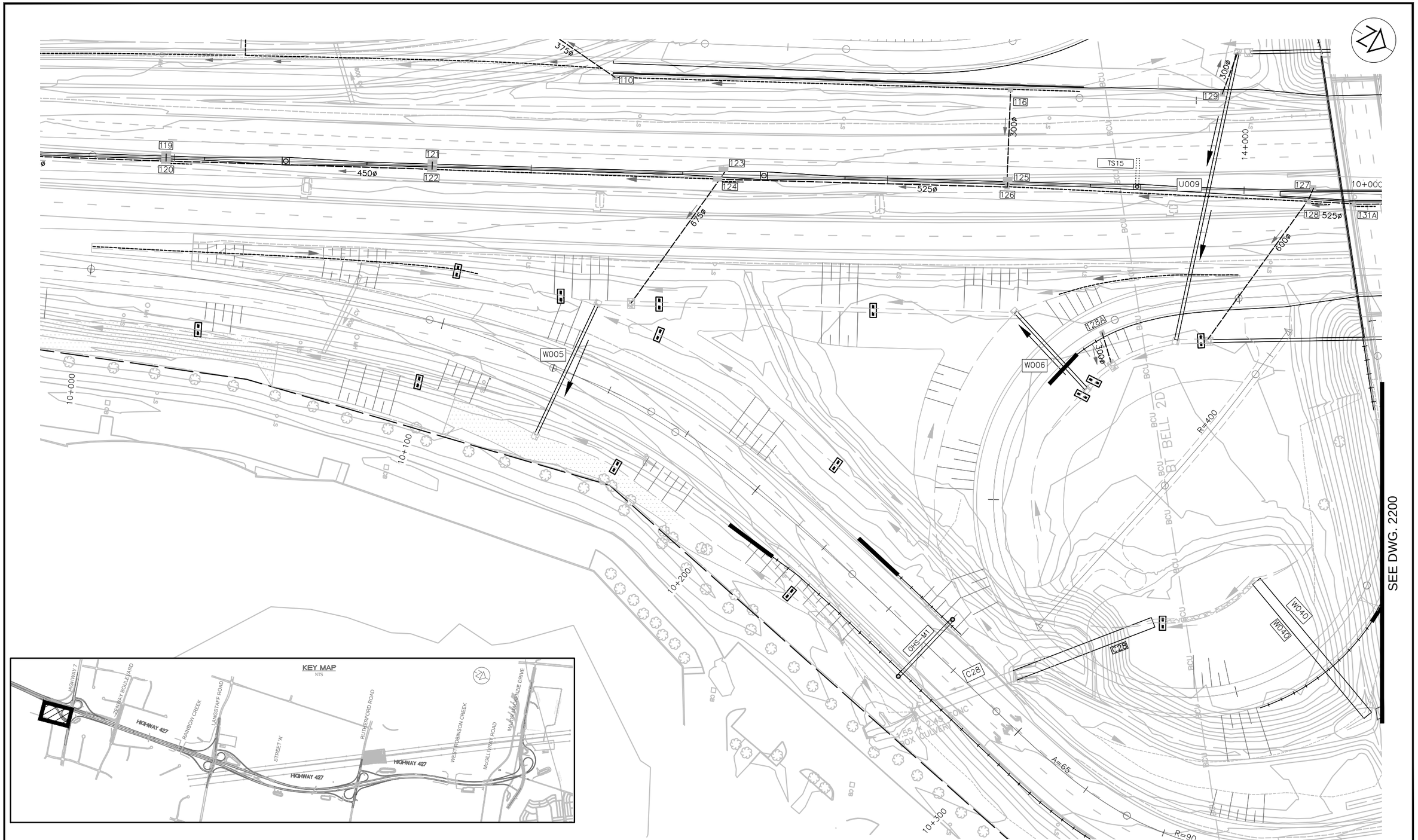

NO.	DATE	REVISIONS	BY	CHK	LEAD. DISC.	PROJ. MAN.
A	19/01/25	90% SUBMISSION TO CA				

SCALE :

5m 0 10m

Metres
HORIZONTAL

CONSULTANT

	NAME (PRINT)	INIT.	DATE
DESIGNED	JUAN LOPEZ		
DRAWN	JAMIE HUANG–HADI ABBASI		
CHECKED	JUAN LOPEZ		
APPROVED LEAD ENGINEER	JUAN LOPEZ		
APPROVED PROJ. MANAGER	PETER BAMFORTH		

Ontario

link427
LOCAL | INTEGRATED | NEIGHBOURLY | KNOWLEDGEABLE

TITLE

HWY 427 EXPANSION
DRY POND 1
STATION 9+600

PROJECT ID.	STAGE INDENTIFIER	DESIGN PACKAGE NUMBER	DISCIPLINE	STRUCTURE NUMBER	DOCUMENT TYPE	DRAWING NUMBER	REVISION NUMBER
H427–D	F	6	WAT	000	DWG	2208	A

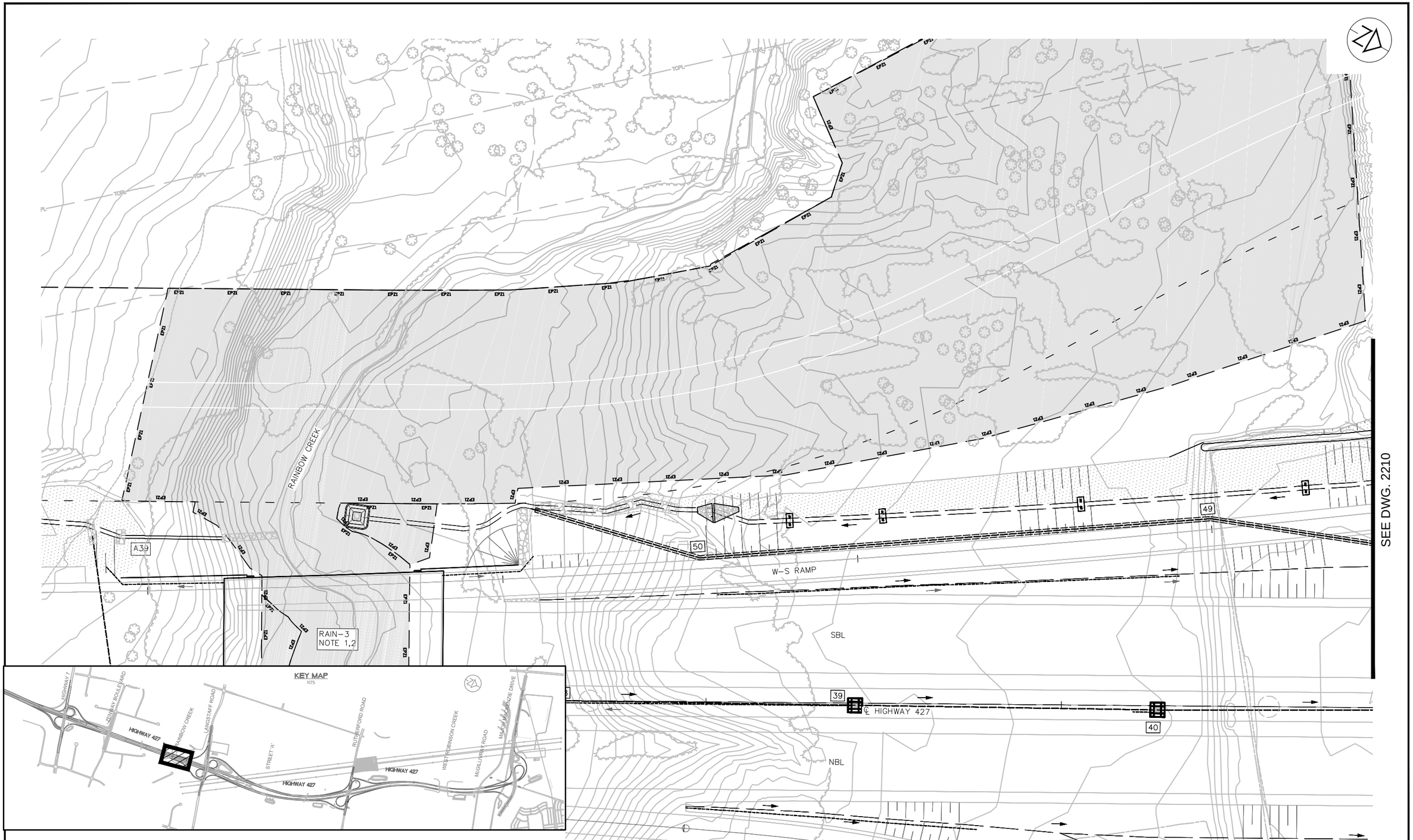

NO.	DATE	REVISIONS	BY	CHK	LEAD. DISC.	PROJ. MAN.
A	19/01/25	90% SUBMISSION TO CA				

SCALE :

5m 0 10m

Metres
HORIZONTAL

CONSULTANT

	NAME (PRINT)	INIT.	DATE
DESIGNED	JUAN LOPEZ		
DRAWN	JAMIE HUANG–HADI ABBAS		
CHECKED	JUAN LOPEZ		
APPROVED LEAD ENGINEER	JUAN LOPEZ		
APPROVED PROJ. MANAGER	PETER BAMFORTH		

Ontario

link427
LOCAL | INTEGRATED | NEIGHBOURLY | KNOWLEDGEABLE

TITLE

HWY 427 EXPANSION
DRY POND 2
STATION 12+300

PROJECT ID.	STAGE INDENTIFIER	DESIGN PACKAGE NUMBER	DISCIPLINE	STRUCTURE NUMBER	DOCUMENT TYPE	DRAWING NUMBER	REVISION NUMBER
H427–D	F	6	WAT	000	DWG	2209	A

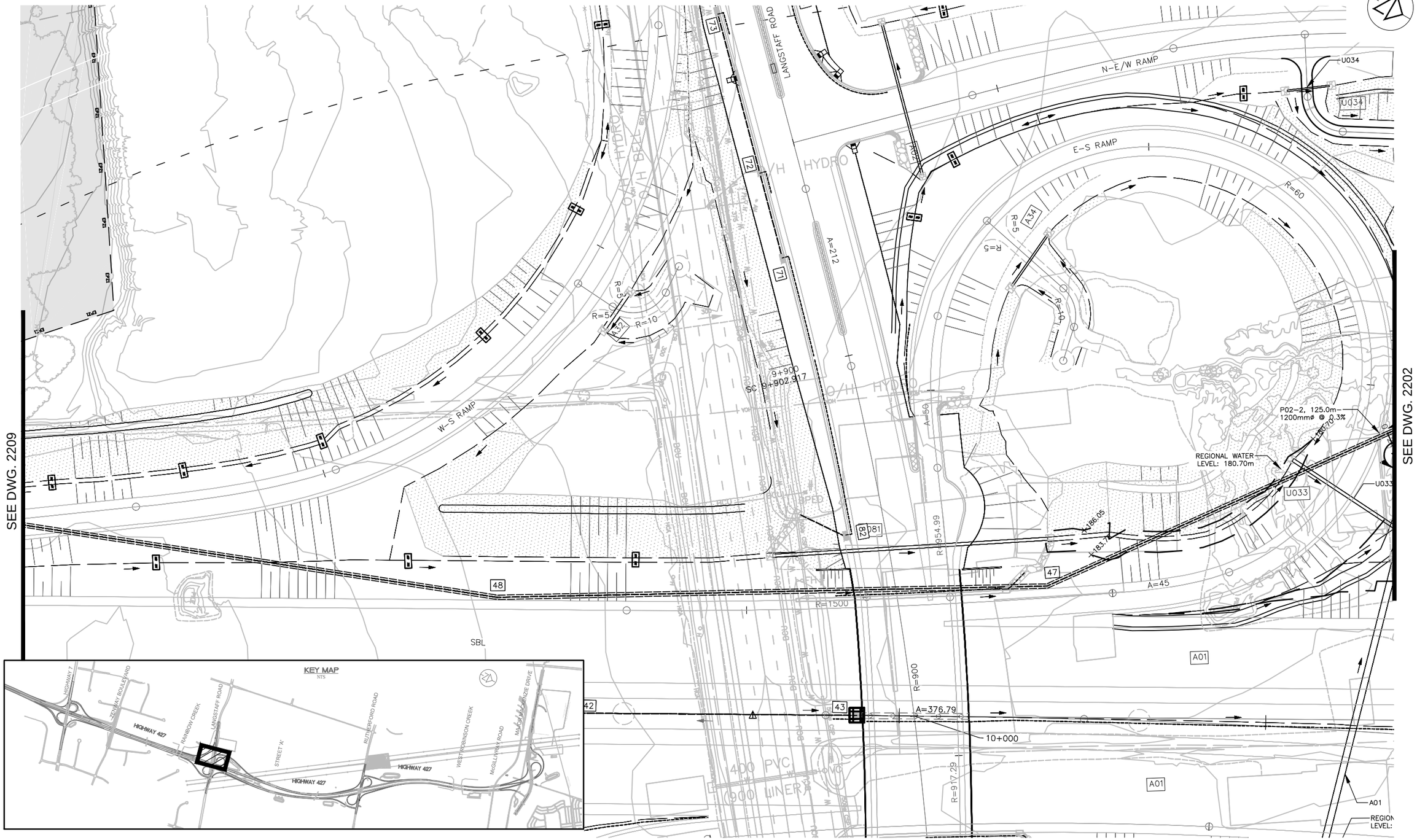

NO.	DATE	REVISIONS	BY	CHK	LEAD. DISC.	PROJ. MAN.
A	19/01/25	90% SUBMISSION TO CA				

SCALE :

5m 0 10m

Metres
HORIZONTAL

CONSULTANT

	NAME (PRINT)	INIT.	DATE
DESIGNED	JUAN LOPEZ		
DRAWN	JAMIE HUANG-HADI ABBAS		
CHECKED	JUAN LOPEZ		
APPROVED LEAD ENGINEER	JUAN LOPEZ		
APPROVED PROJ. MANAGER	PETER BAMFORTH		

Ontario

link427
LOCAL | INTEGRATED | NEIGHBOURLY | KNOWLEDGEABLE

TITLE

HWY 427 EXPANSION
DRY POND 2
STATION 12+300

PROJECT ID.	STAGE INDENTIFIER	DESIGN PACKAGE NUMBER	DISCIPLINE	STRUCTURE NUMBER	DOCUMENT TYPE	DRAWING NUMBER	REVISION NUMBER
H427-D	F	6	WAT	000	DWG	2210	A

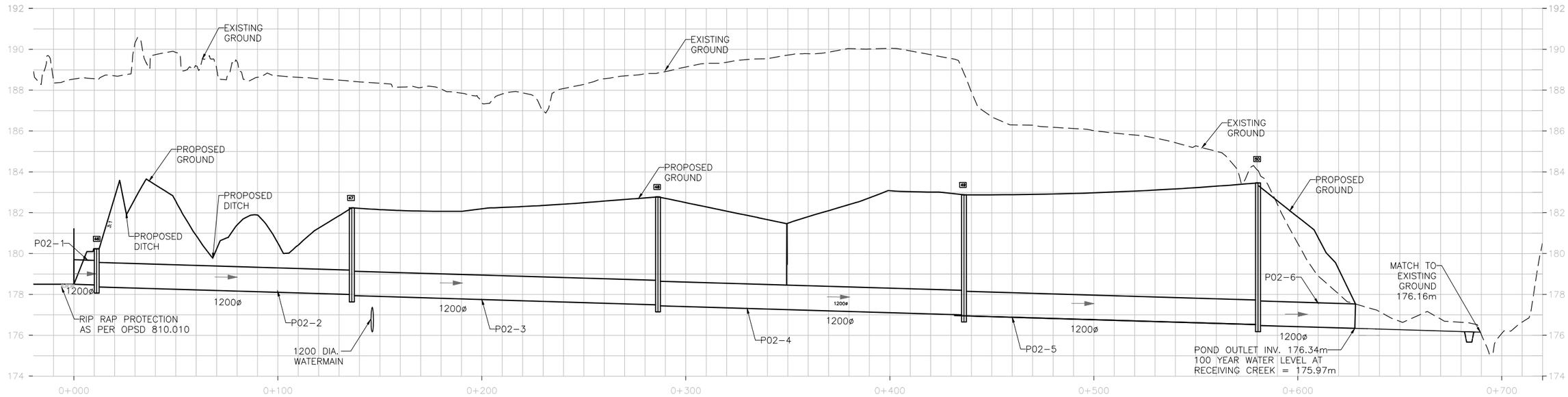

Pond 2 Outlet

NO.	DATE	REVISIONS	BY	CHK	LEAD. DISC.	PROJ. MAN.
A	19/01/25	90% SUBMISSION TO CA				

SCALE :

1m 0 2m
Metres VERTICAL

10m 0 20m
Metres HORIZONTAL

CONSULTANT

	NAME (PRINT)	INIT.	DATE
DESIGNED	JUAN LOPEZ		
DRAWN	JAMIE HUANG-HADI ABBASI		
CHECKED	JUAN LOPEZ		
APPROVED LEAD ENGINEER	JUAN LOPEZ		
APPROVED PROJ. MANAGER	PETER BAMFORTH		

Ontario

link427
LOCAL | INTEGRATED | NEIGHBOURLY | KNOWLEDGEABLE

TITLE

HWY 427 EXPANSION
POND SECTION
DRY POND 2
STATION 12+300

PROJECT ID.	STAGE INDENTIFIER	DESIGN PACKAGE NUMBER	DISCIPLINE	STRUCTURE NUMBER	DOCUMENT TYPE	DRAWING NUMBER	REVISION NUMBER
H427-D	F	6	WAT	000	DWG	2211	A

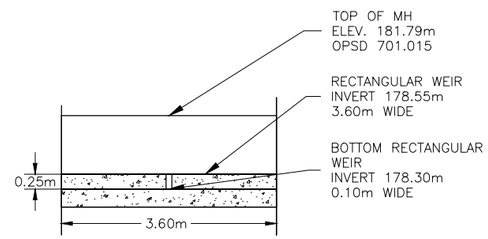

POND 1 INTERNAL MAINTENANCE HOLE
OUTLET CONFIGURATION
1:100

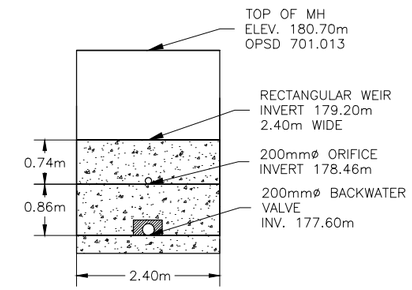

POND 2 INTERNAL MAINTENANCE HOLE
OUTLET CONFIGURATION
1:100

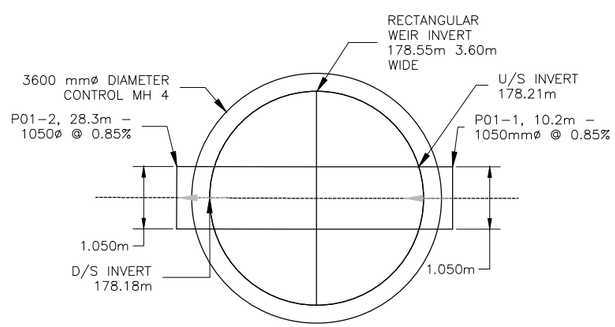

POND 1 INTERNAL MAINTENANCE HOLE
BENCHING DETAILS
1:100

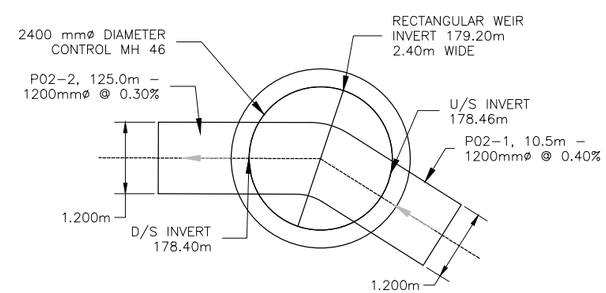

POND 2 INTERNAL MAINTENANCE HOLE
BENCHING DETAILS
1:100

NO.	DATE	REVISIONS	BY	CHK	LEAD. DISC.	PROJ. MAN.
A	19/01/25	90% SUBMISSION TO CA				

SCALE :

CONSULTANT

	NAME (PRINT)	INIT.	DATE
DESIGNED	JUAN LOPEZ	J.L.	
DRAWN	JAMIE HUANG	J.H.	
CHECKED	JUAN LOPEZ	J.L.	
APPROVED LEAD ENGINEER	JUAN LOPEZ	J.L.	
APPROVED PROJ. MANAGER	PETER BAMFORTH	P.B.	

Ontario

link427
LOCAL | INTEGRATED | NEIGHBOURLY | KNOWLEDGEABLE

TITLE
HWY 427 EXPANSION
STORMWATER MANAGEMENT
DETAILS PACKAGE 6

PROJECT ID.	STAGE INDENTIFIER	DESIGN PACKAGE NUMBER	DISCIPLINE	STRUCTURE NUMBER	DOCUMENT TYPE	DRAWING NUMBER	REVISION NUMBER
H427-D	F	6	WAT	000	DWG	2212	A

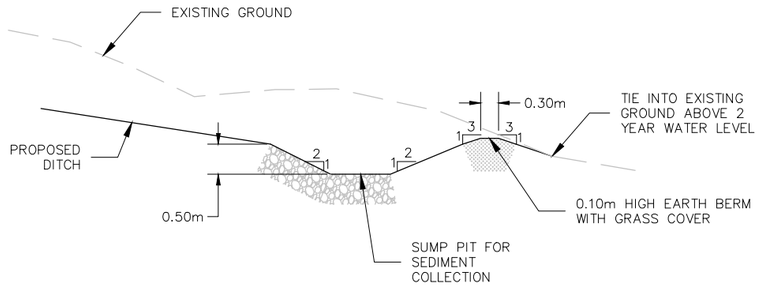

NOTES:

1. WIDTH AND LENGTH OF SUMP PIT BOTTOM TO BE PIPE DIAMETER + 1.2m OR EQUIVALENT TO THE INCOMING FLAT BOTTOM DITCH WIDTH.

TYPICAL FLOW SPREADER PROFILE DETAIL

1:100

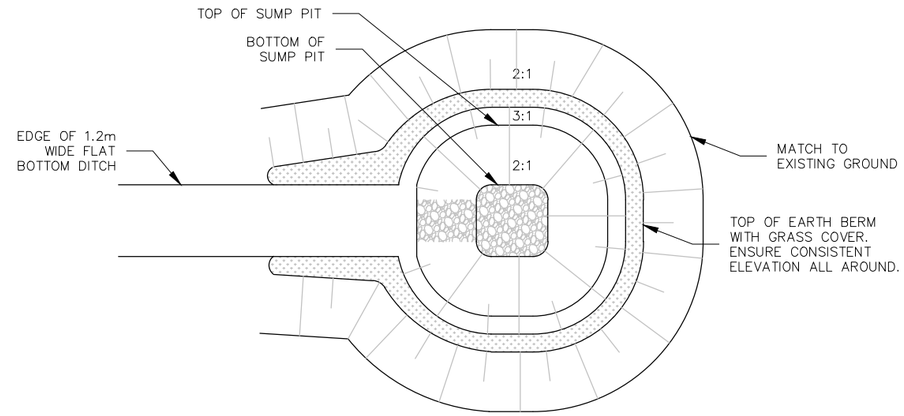

TYPICAL FLOW SPREADER PLAN DETAIL

1:100

NO.	DATE	REVISIONS	BY	CHK	LEAD. DISC.	PROJ. MAN.
A	19/01/25	90% SUBMISSION TO CA				

SCALE :

CONSULTANT

	NAME (PRINT)	INIT.	DATE
DESIGNED	JUAN LOPEZ	J.L.	
DRAWN	JAMIE HUANG	J.H.	
CHECKED	JUAN LOPEZ	J.L.	
APPROVED LEAD ENGINEER	JUAN LOPEZ	J.L.	
APPROVED PROJ. MANAGER	PETER BAMFORTH	P.B.	

Ontario

link427
LOCAL | INTEGRATED | NEIGHBOURLY | KNOWLEDGEABLE

TITLE

HWY 427 EXPANSION
STORMWATER MANAGEMENT
DETAILS

PROJECT ID.	STAGE INDENTIFIER	DESIGN PACKAGE NUMBER	DISCIPLINE	STRUCTURE NUMBER	DOCUMENT TYPE	DRAWING NUMBER	REVISION NUMBER
H427–D	F	6	WAT	000	DWG	2213	A

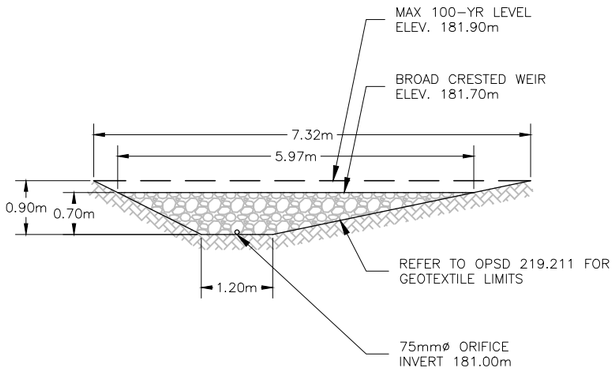

CHECK DAM A1
OUTLET CONFIGURATION
1:100

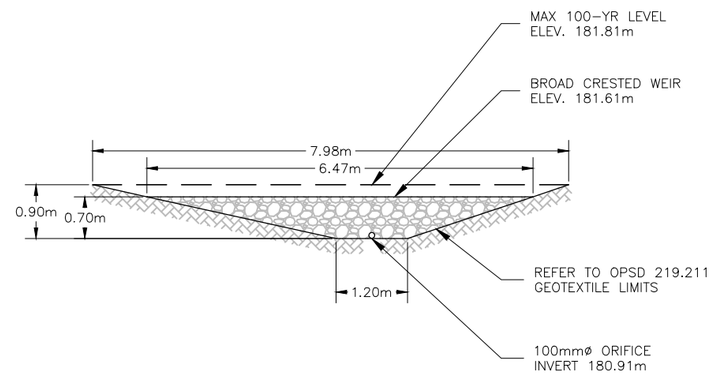

CHECK DAM B1
OUTLET CONFIGURATION
1:100

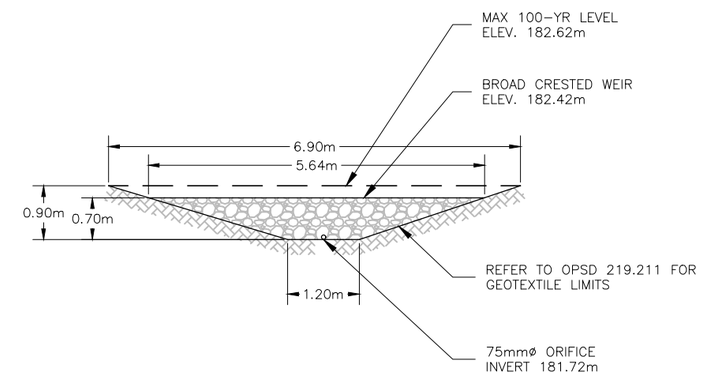

CHECK DAM C1
OUTLET CONFIGURATION
1:100

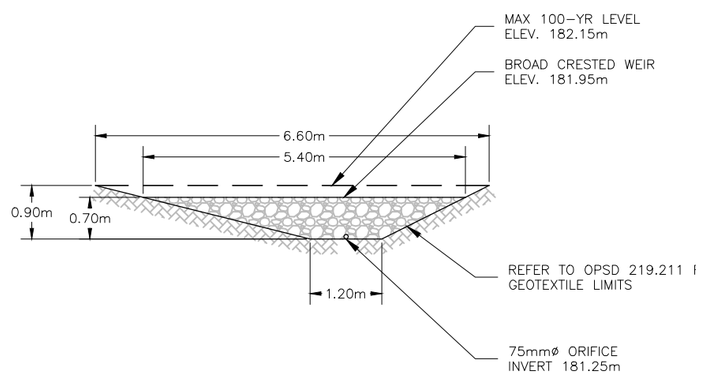

CHECK DAM D1
OUTLET CONFIGURATION
1:100

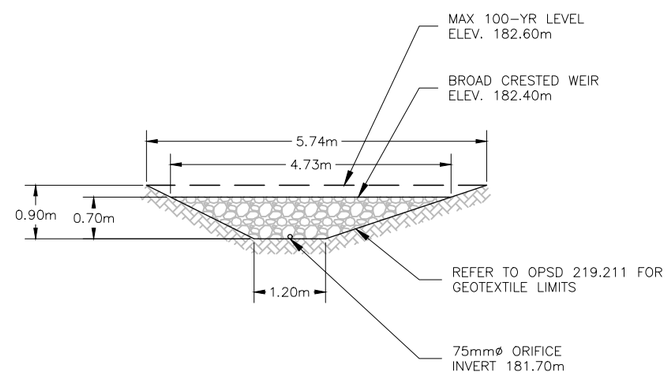

CHECK DAM E1
OUTLET CONFIGURATION
1:100

NO.	DATE	REVISIONS	BY	CHK	LEAD. DISC.	PROJ. MAN.
A	19/01/25	90% SUBMISSION TO CA				

SCALE :

CONSULTANT

	NAME (PRINT)	INIT.	DATE
DESIGNED	JUAN LOPEZ	J.L.	
DRAWN	JAMIE HUANG	J.H.	
CHECKED	JUAN LOPEZ	J.L.	
APPROVED LEAD ENGINEER	JUAN LOPEZ	J.L.	
APPROVED PROJ. MANAGER	PETER BAMFORTH	P.B.	

Ontario

link427
LOCAL | INTEGRATED | NEIGHBOURLY | KNOWLEDGEABLE

TITLE
HWY 427 EXPANSION
STORMWATER MANAGEMENT
FACILITY TABLE PACKAGE 6

PROJECT ID.	STAGE INDENTIFIER	DESIGN PACKAGE NUMBER	DISCIPLINE	STRUCTURE NUMBER	DOCUMENT TYPE	DRAWING NUMBER	REVISION NUMBER
H427-D	F	6	WAT	000	DWG	2214	A

	SWM POND PROPERTIES						RECEIVING WATERCOURSE		SWM POND INLET FACILITY							SWM POND OUTLET FACILITY							
DESIGN SEGMENT	POND ID	STATION	BOTTOM ELEVATION (m)	PERMANENT POOL (m)	100 YR WATER LEVEL	FREEBOARD (m)	2 YEAR WATER LEVEL (m)	100 YEAR WATER LEVEL (m)	ID	TYPE	DIAMETER (mm)	UPSTREAM INVERT(m)	LENGTH (m)	SLOPE	DOWNSTREAM INVERT (m)	ID	TYPE / SPECIFICATION[1]	DIAMETER (mm)	UPSTREAM INVERT(m)	LENGTH (m)	SLOPE	DOWNSTREAM INVERT (m)	NOTES: OUTLET CONFIGURATION
L-3	1	9+600	178.30	N/A	178.94	N/A	N/A	N/A	EXISTING C32	CONC. BOX	1220 x 2400	178.71	98.29	0.31%	178.41	P01-1	65-D	1050	178.30	10.20	0.85%	178.21	
																MH4	701.015	3600	/	/	/	/	0.10m WIDE WEIR CREST ELEV.178.30m 3.60m WIDE WEIR CREST ELEV. 178.55m
									DITCH	V-NOTCH	N/A	-	-	-	178.62	P01-2	65-D	1050.00	178.18	28.30	0.85%	177.94	
																HW2	804.030	1050	/	/	/	/	
																DITCH	V-NOTCH	-	177.94	13.30	0.3%	177.90	
																EXISTING C29	BOX	1550 x 2440	177.90	56.00	0.3%	177.74	
	2	12+300	178.50	N/A	179.65	180.10	175.55	175.97	A46	CONC.	1800 x 1200	179.70	17.00	0.30%	179.65	Headwall to MH46 (P02-1)	65-D	1200	178.50	10.5	0.38%	178.46	
									A50	CONC.	900	180.00	16.00	0.44%	179.93	MH46	701.013	2400	/	/	/	/	200mm ORIFICE INV. 178.46m 2.40m WIDE WEIR CREST ELEV. 179.20m 200mm BACKWATER VALVE INV, 177.60m
																MH46 to MH47 (P02-2)	100-D	1200	178.37	125	0.30%	178.00	
																MH47 to MH48 (P02-3)	65-D	1200	177.94	150	0.29%	177.50	
																MH48 to MH49 (P02-4)	100-D	1200	177.45	150	0.30%	177.00	
																MH49 to MH50 (P02-5)	100-D	1200	176.95	144	0.29%	176.53	
																MH50 to Outlet (P02-6)	100-D	1200	176.48	48.5	0.3%	176.34	

NOTE: REINFORCED CONCRETE PIPE CLASS BASED ON OPSD 807.010 MAXIMUM HEIGHT OF FILL WITH CLASS B BEDDING FOR ALL PIPES

NO.	DATE	REVISIONS	BY	CHK	LEAD. DISC.	PROJ. MAN.
A	19/01/25	90% SUBMISSION TO CA				

SCALE :

CONSULTANT

	NAME (PRINT)	INIT.	DATE
DESIGNED	JUAN LOPEZ	J.L.	
DRAWN	JAMIE HUANG	J.H.	
CHECKED	JUAN LOPEZ	J.L.	
APPROVED LEAD ENGINEER	JUAN LOPEZ	J.L.	
APPROVED PROJ. MANAGER	PETER BAMFORTH	P.B.	

Ontario

link427 LOCAL | INTEGRATED | NEIGHBOURLY | KNOWLEDGEABLE

TITLE

HWY 427 EXPANSION
STORMWATER MANAGEMENT
FACILITY TABLE PACKAGE 6

PROJECT ID.	STAGE INDENTIFIER	DESIGN PACKAGE NUMBER	DISCIPLINE	STRUCTURE NUMBER	DOCUMENT TYPE	DRAWING NUMBER	REVISION NUMBER
H427-D	F	6	WAT	000	DWG	2215	A

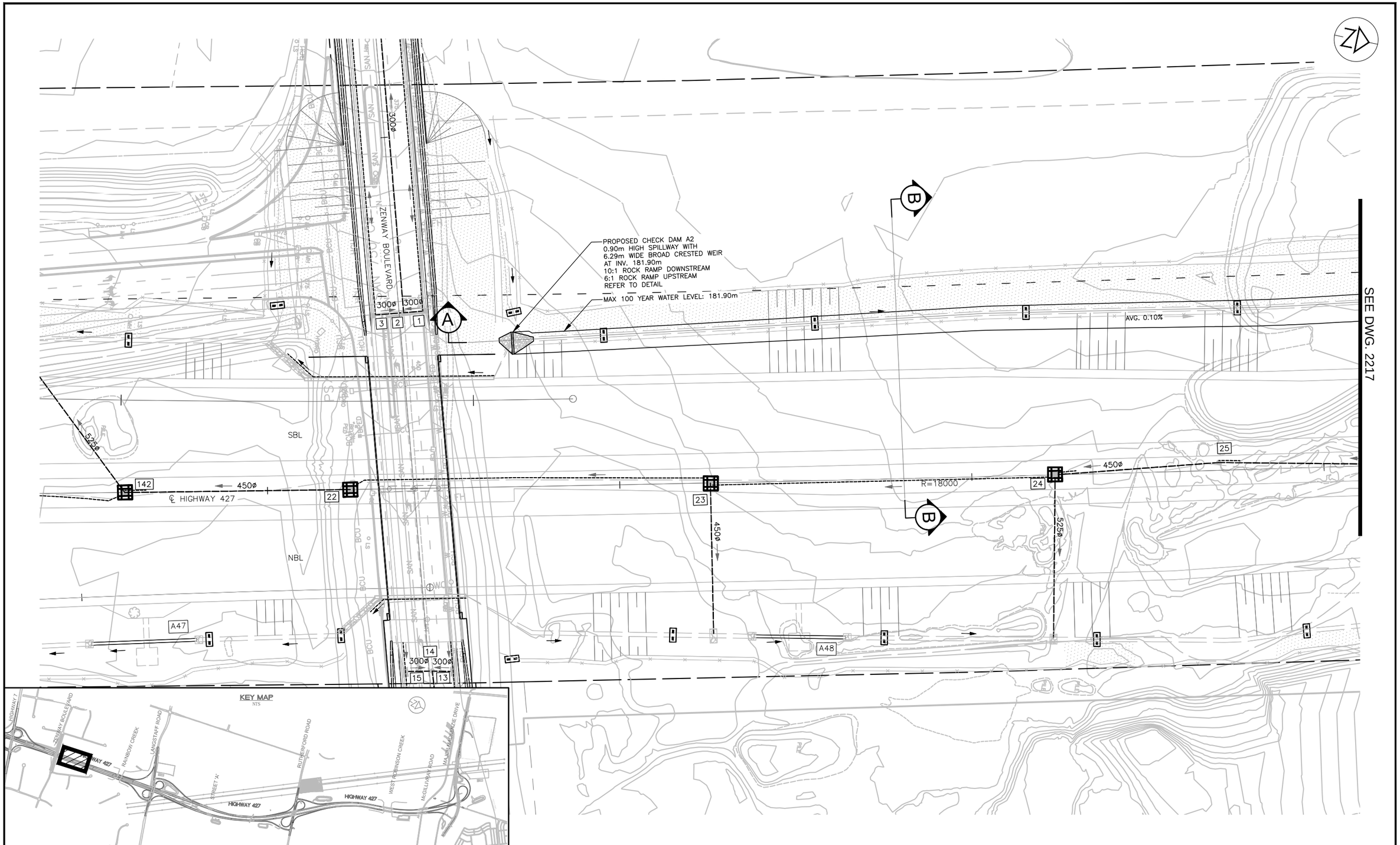

NO.	DATE	REVISIONS	BY	CHK	LEAD. DISC.	PROJ. MAN.
A	19/01/25	90% SUBMISSION TO CA				

SCALE :

5m 0 10m

Metres HORIZONTAL

CONSULTANT

	NAME (PRINT)	INIT.	DATE
DESIGNED	JUAN LOPEZ		
DRAWN	JAMIE HUANG		
CHECKED	JUAN LOPEZ		
APPROVED LEAD ENGINEER	JUAN LOPEZ		
APPROVED PROJ. MANAGER	PETER BAMFORTH		

Ontario

link427
LOCAL | INTEGRATED | NEIGHBOURLY | KNOWLEDGEABLE

TITLE

HWY 427 EXPANSION
ENHANCED GRASS SWALE A
CHECK DAM A2

PROJECT ID.	STAGE INDENTIFIER	DESIGN PACKAGE NUMBER	DISCIPLINE	STRUCTURE NUMBER	DOCUMENT TYPE	DRAWING NUMBER	REVISION NUMBER
H427–D	F	6	WAT	000	DWG	2216	A

SEE DWG. 2216

EC 10+915.808

PROPOSED CHECK DAM A1
0.70m HIGH SPILLWAY WITH
5.97m WIDE BROAD CRESTED WEIR
AT INV. 181.70m
10:1 ROCK RAMP DOWNSTREAM
6:1 ROCK RAMP UPSTREAM
REFER TO DETAIL

MAX 100 YEAR WATER LEVEL: 181.90m

AVG. 0.10%

SBL

NBL

R=18000

450ø

375ø

300ø

525ø

24

25

26

27

℄ HIGHWAY 427

A48

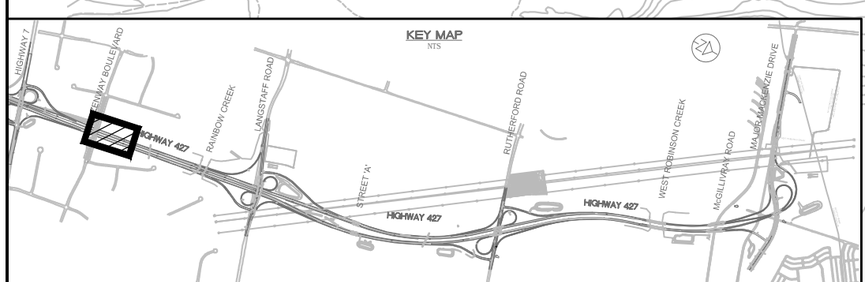

NO.	DATE	REVISIONS	BY	CHK	LEAD. DISC.	PROJ. MAN.
A	19/01/25	90% SUBMISSION TO CA				

SCALE :

5m 0 10m
Metres
HORIZONTAL

CONSULTANT

	NAME (PRINT)	INIT.	DATE
DESIGNED	JUAN LOPEZ		
DRAWN	JAMIE HUANG		
CHECKED	JUAN LOPEZ		
APPROVED LEAD ENGINEER	JUAN LOPEZ		
APPROVED PROJ. MANAGER	PETER BAMFORTH		

Ontario

link427
LOCAL | INTEGRATED | NEIGHBOURLY | KNOWLEDGEABLE

TITLE

HWY 427 EXPANSION
ENHANCED GRASS SWALE A
CHECK DAM A1

PROJECT ID.	STAGE INDENTIFIER	DESIGN PACKAGE NUMBER	DISCIPLINE	STRUCTURE NUMBER	DOCUMENT TYPE	DRAWING NUMBER	REVISION NUMBER
H427-D	F	6	WAT	000	DWG	2217	A

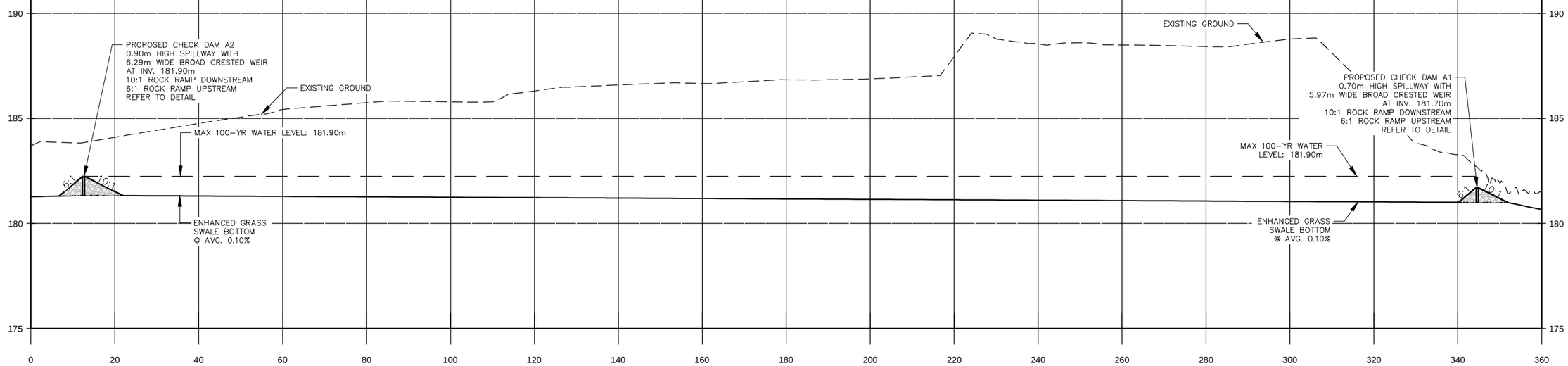

Enhanced Grass Swale A A-A

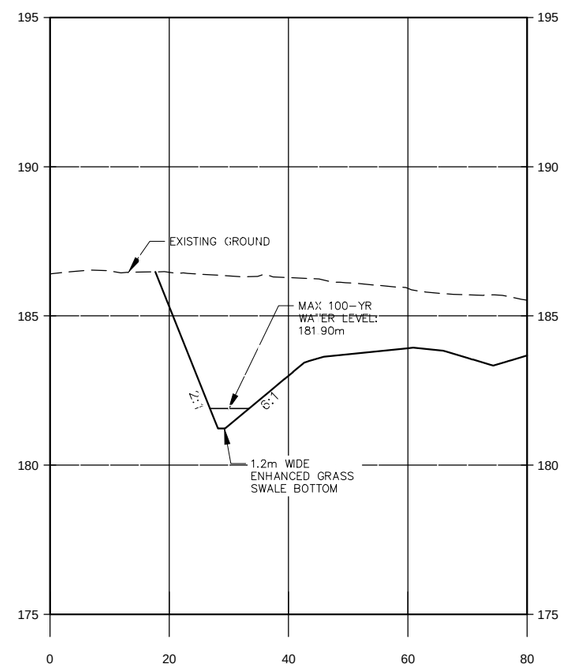

Enhanced Grass Swale A B-B

NO.	DATE	REVISIONS	BY	CHK	LEAD. DISC.	PROJ. MAN.
A	19/01/25	90% SUBMISSION TO CA				

SCALE :

1m 0 2m
Metres VERTICAL

5m 0 10m
Metres HORIZONTAL

CONSULTANT

	NAME (PRINT)	INIT.	DATE
DESIGNED	JUAN LOPEZ		
DRAWN	JAMIE HUANG-HADI ABBASI		
CHECKED	JUAN LOPEZ		
APPROVED LEAD ENGINEER	JUAN LOPEZ		
APPROVED PROJ. MANAGER	PETER BAMFORTH		

Ontario

link427
LOCAL | INTEGRATED | NEIGHBOURLY | KNOWLEDGEABLE

TITLE

HWY 427 EXPANSION
ENHANCED GRASS SWALE SECTION
CHECK DAM A1 AND A2

PROJECT ID.	STAGE INDENTIFIER	DESIGN PACKAGE NUMBER	DISCIPLINE	STRUCTURE NUMBER	DOCUMENT TYPE	DRAWING NUMBER	REVISION NUMBER
H427-D	F	6	WAT	000	DWG	2218	A

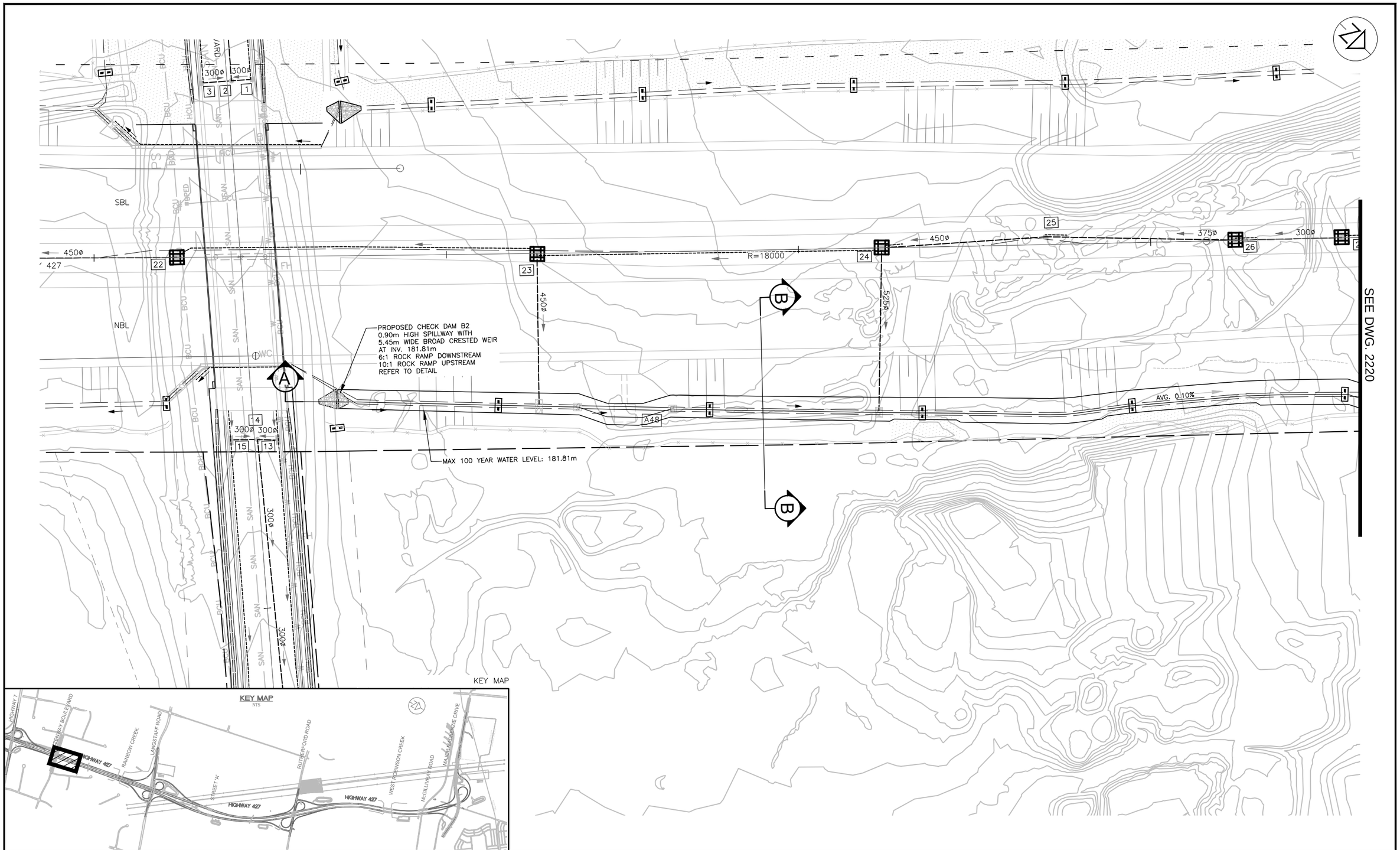

NO.	DATE	REVISIONS	BY	CHK	LEAD. DISC.	PROJ. MAN.
A	19/01/25	90% SUBMISSION TO CA				

SCALE :

5m 0 10m

Metres
HORIZONTAL

CONSULTANT

	NAME (PRINT)	INIT.	DATE
DESIGNED	JUAN LOPEZ		
DRAWN	JAMIE HUANG		
CHECKED	JUAN LOPEZ		
APPROVED LEAD. ENGINEER	JUAN LOPEZ		
APPROVED PROJ. MANAGER	PETER BAMFORTH		

Ontario

link427
LOCAL | INTEGRATED | NEIGHBOURLY | KNOWLEDGEABLE

TITLE

HWY 427 EXPANSION
ENHANCED GRASS SWALE B
CHECK DAM B2

PROJECT ID.	STAGE INDENTIFIER	DESIGN PACKAGE NUMBER	DISCIPLINE	STRUCTURE NUMBER	DOCUMENT TYPE	DRAWING NUMBER	REVISION NUMBER
H427–D	F	6	WAT	000	DWG	2219	A

SEE DWG. 2219

SBL

NBL

℄ HIGHWAY 427

24 25 26 27 28 29

450ø 375ø 300ø 300ø 300ø 450ø 525ø

MAX 100 YEAR WATER LEVEL: 181.81m

PROPOSED CHECK DAM B1
100mmø ORIFICE AT INV. 180.91m
0.70m HIGH SPILLWAY WITH
6.47m WIDE BROAD CRESTED WEIR
AT INV. 181.61m
6:1 ROCK RAMP DOWNSTREAM
10:1 ROCK RAMP UPSTREAM
REFER TO DETAIL

A

AVG. 0.10%

KEY MAP

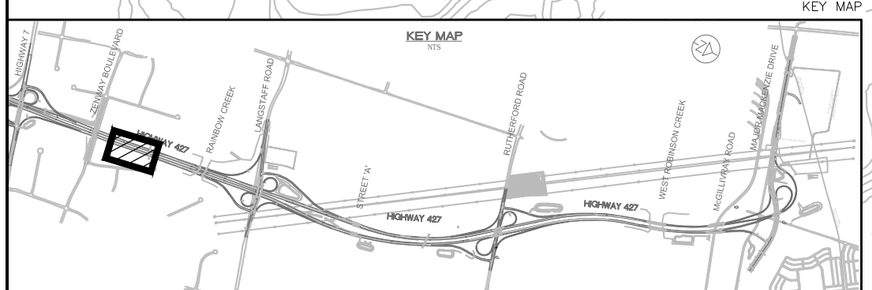

NO.	DATE	REVISIONS	BY	CHK	LEAD. DISC.	PROJ. MAN.
A	19/01/25	90% SUBMISSION TO CA				

SCALE :

5m 0 10m
Metres
HORIZONTAL

CONSULTANT

	NAME (PRINT)	INIT.	DATE
DESIGNED	JUAN LOPEZ		
DRAWN	JAMIE HUANG		
CHECKED	JUAN LOPEZ		
APPROVED LEAD ENGINEER	JUAN LOPEZ		
APPROVED PROJ. MANAGER	PETER BAMFORTH		

Ontario

link427
LOCAL | INTEGRATED | NEIGHBOURLY | KNOWLEDGEABLE

TITLE

HWY 427 EXPANSION
ENHANCED GRASS SWALE B
CHECK DAM B1

PROJECT ID.	STAGE INDENTIFIER	DESIGN PACKAGE NUMBER	DISCIPLINE	STRUCTURE NUMBER	DOCUMENT TYPE	DRAWING NUMBER	REVISION NUMBER
H427–D	F	6	WAT	000	DWG	2220	A

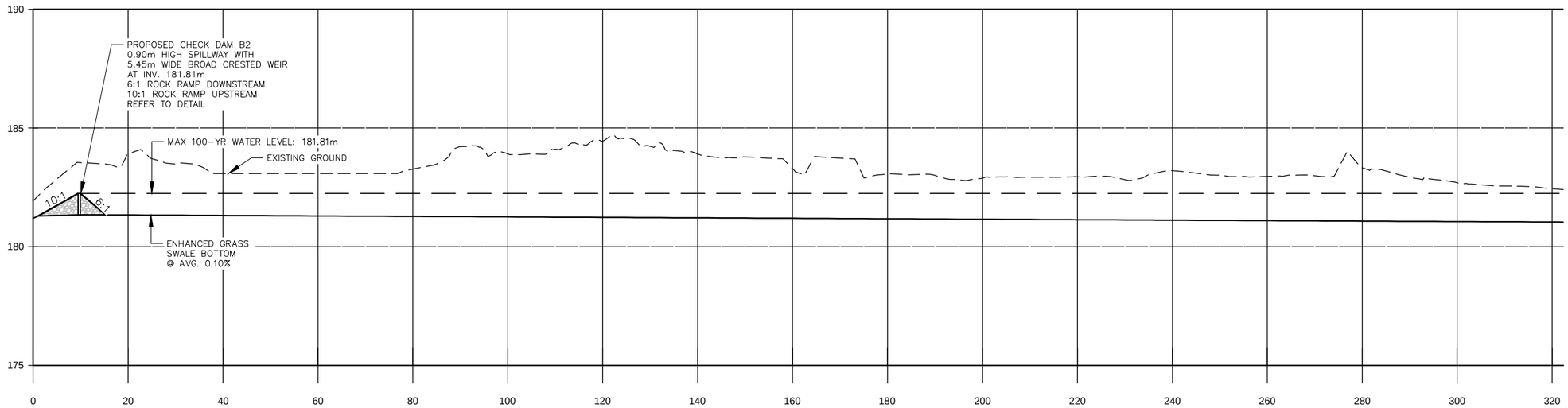

Enhanced Grass Swale B A-A

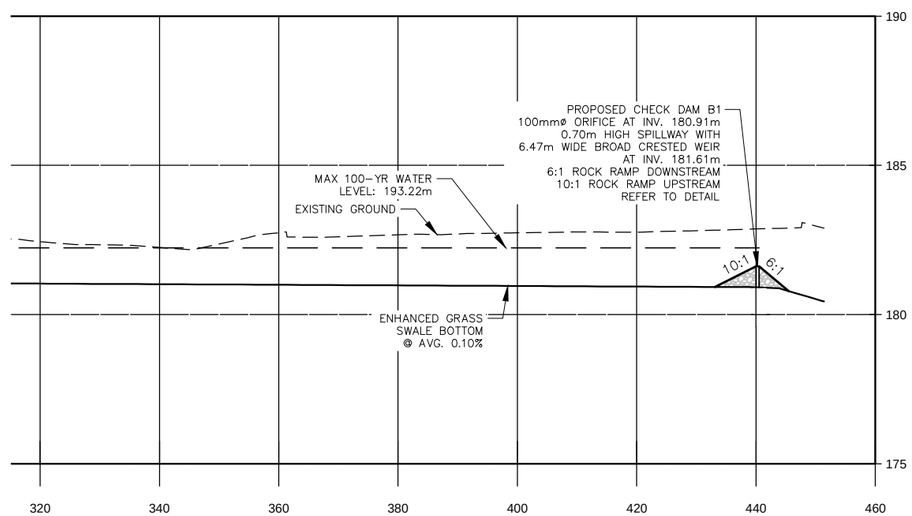

Enhanced Grass Swale B A-A

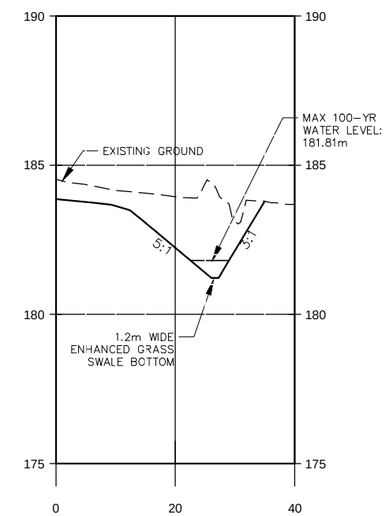

Enahnced Grass Swale F B-B

NO.	DATE	REVISIONS	BY	CHK	LEAD. DISC.	PROJ. MAN.
A	19/01/25	90% SUBMISSION TO CA				

SCALE :

1m 0 2m — Metres VERTICAL

5m 0 10m — Metres HORIZONTAL

CONSULTANT

	NAME (PRINT)	INIT.	DATE
DESIGNED	JUAN LOPEZ		
DRAWN	JAMIE HUANG-HADI ABBASI		
CHECKED	JUAN LOPEZ		
APPROVED LEAD ENGINEER	JUAN LOPEZ		
APPROVED PROJ. MANAGER	PETER BAMFORTH		

Ontario

link427 — LOCAL | INTEGRATED | NEIGHBOURLY | KNOWLEDGEABLE

TITLE

HWY 427 EXPANSION
ENHANCED GRASS SWALE SECTION
CHECK DAM B1 AND B2

PROJECT ID.	STAGE INDENTIFIER	DESIGN PACKAGE NUMBER	DISCIPLINE	STRUCTURE NUMBER	DOCUMENT TYPE	DRAWING NUMBER	REVISION NUMBER
H427-D	F	6	WAT	000	DWG	2221	A

SBL

NBL

℄ HIGHWAY 427

30 31 32 33 34 35 36 37

300ø 375ø 375ø 450ø 525ø

600ø

300ø

A39

PROPOSED CHECK DAM C1
75mmø ORIFICE AT INV. 182.42m
0.70m HIGH SPILLWAY WITH
5.64m WIDE BROAD CRESTED WEIR
AT INV. 182.42m
6:1 ROCK RAMP DOWNSTREAM
10:1 ROCK RAMP UPSTREAM
REFER TO DETAIL

MAX 100 YEAR WATER LEVEL: 182.62m

AVG. 0.35%

A

B

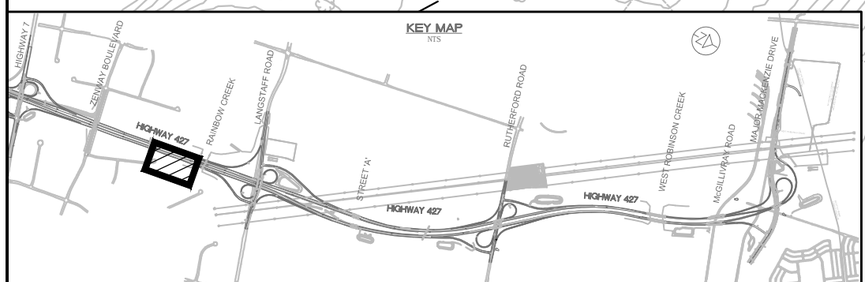

NO.	DATE	REVISIONS	BY	CHK	LEAD. DISC.	PROJ. MAN.
A	19/01/25	90% SUBMISSION TO CA				

SCALE :

5m 0 10m
Metres
HORIZONTAL

CONSULTANT

	NAME (PRINT)	INIT.	DATE
DESIGNED	JUAN LOPEZ		
DRAWN	JAMIE HUANG		
CHECKED	JUAN LOPEZ		
APPROVED LEAD ENGINEER	JUAN LOPEZ		
APPROVED PROJ. MANAGER	PETER BAMFORTH		

Ontario

link427
LOCAL | INTEGRATED | NEIGHBOURLY | KNOWLEDGEABLE

TITLE

HWY 427 EXPANSION
ENHANCED GRASS SWALE C
CHECK DAM C1

PROJECT ID.	STAGE INDENTIFIER	DESIGN PACKAGE NUMBER	DISCIPLINE	STRUCTURE NUMBER	DOCUMENT TYPE	DRAWING NUMBER	REVISION NUMBER
H427–D	F	6	WAT	000	DWG	2222	A

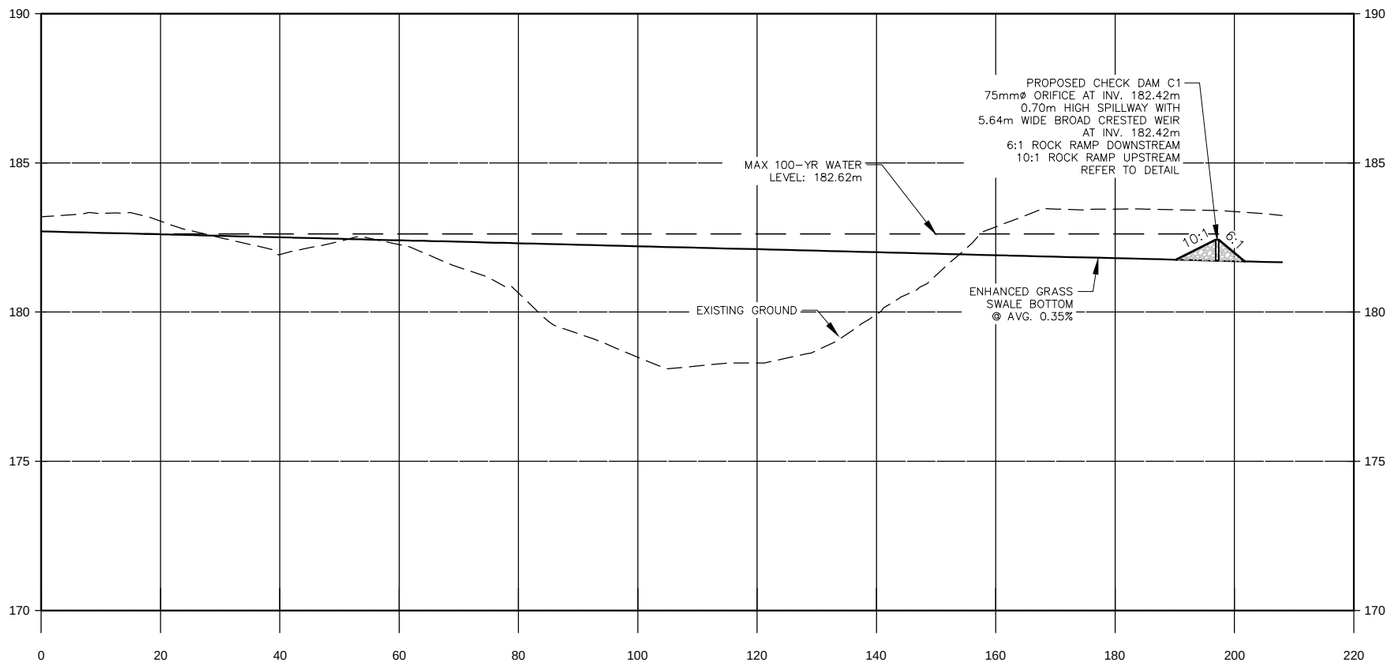

Enhanced Grass Swale C A-A

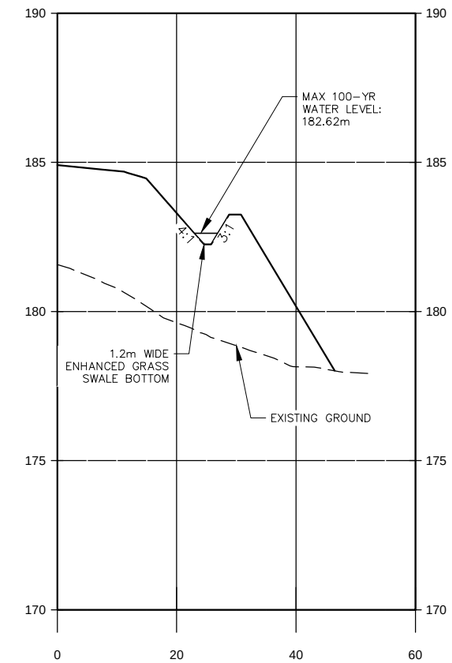

Enahnced Grass Swale C B-B

NO.	DATE	REVISIONS	BY	CHK	LEAD. DISC.	PROJ. MAN.
A	19/01/25	90% SUBMISSION TO CA				

SCALE :

1m 0 2m
Metres
VERTICAL

5m 0 10m
Metres
HORIZONTAL

CONSULTANT

	NAME (PRINT)	INIT.	DATE
DESIGNED	JUAN LOPEZ		
DRAWN	JAMIE HUANG-HADI ABBASI		
CHECKED	JUAN LOPEZ		
APPROVED LEAD ENGINEER	JUAN LOPEZ		
APPROVED PROJ. MANAGER	PETER BAMFORTH		

Ontario

link427
LOCAL | INTEGRATED | NEIGHBOURLY | KNOWLEDGEABLE

TITLE

HWY 427 EXPANSION
ENHANCED GRASS SWALE SECTION
CHECK DAM C1

PROJECT ID.	STAGE INDENTIFIER	DESIGN PACKAGE NUMBER	DISCIPLINE	STRUCTURE NUMBER	DOCUMENT TYPE	DRAWING NUMBER	REVISION NUMBER
H427-D	F	6	WAT	000	DWG	2223	A

PROPOSED CHECK DAM D1
0.70m HIGH SPILLWAY WITH
5.40m WIDE BROAD CRESTED WEIR
AT INV. 181.95m
6:1 ROCK RAMP DOWNSTREAM
10:1 ROCK RAMP UPSTREAM
REFER TO DETAIL

MAX 100 YEAR WATER LEVEL: 182.15m

A
A'
B
B'

W-S RAMP

1200ø
1200ø
1200ø
1200ø
525ø
525ø
450ø
450ø
375ø

38
39
40
41
48
49
50

℄ HIGHWAY 427
℄ HIGHWAY 427

SBL
SBL
NBL
NBL

KEY MAP

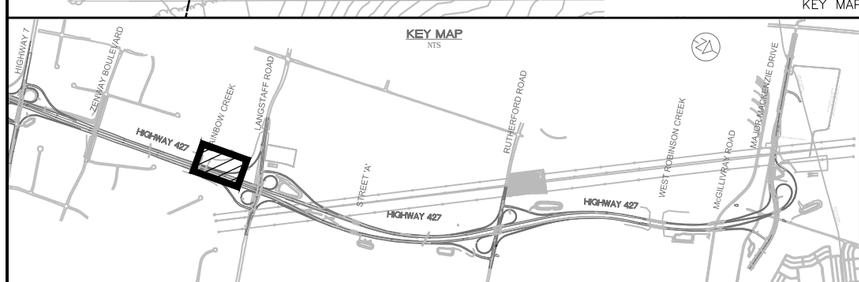

NO.	DATE	REVISIONS	BY	CHK	LEAD. DISC.	PROJ. MAN.
A	19/01/25	90% SUBMISSION TO CA				

SCALE :

5m 0 10m
Metres
HORIZONTAL

CONSULTANT

	NAME (PRINT)	INIT.	DATE
DESIGNED	JUAN LOPEZ		
DRAWN	JAMIE HUANG		
CHECKED	JUAN LOPEZ		
APPROVED LEAD ENGINEER	JUAN LOPEZ		
APPROVED PROJ. MANAGER	PETER BAMFORTH		

Ontario

link427
LOCAL | INTEGRATED | NEIGHBOURLY | KNOWLEDGEABLE

TITLE

HWY 427 EXPANSION
ENHANCED GRASS SWALE D
CHECK DAM D1

PROJECT ID.	STAGE INDENTIFIER	DESIGN PACKAGE NUMBER	DISCIPLINE	STRUCTURE NUMBER	DOCUMENT TYPE	DRAWING NUMBER	REVISION NUMBER
H427–D	F	6	WAT	000	DWG	2224	A

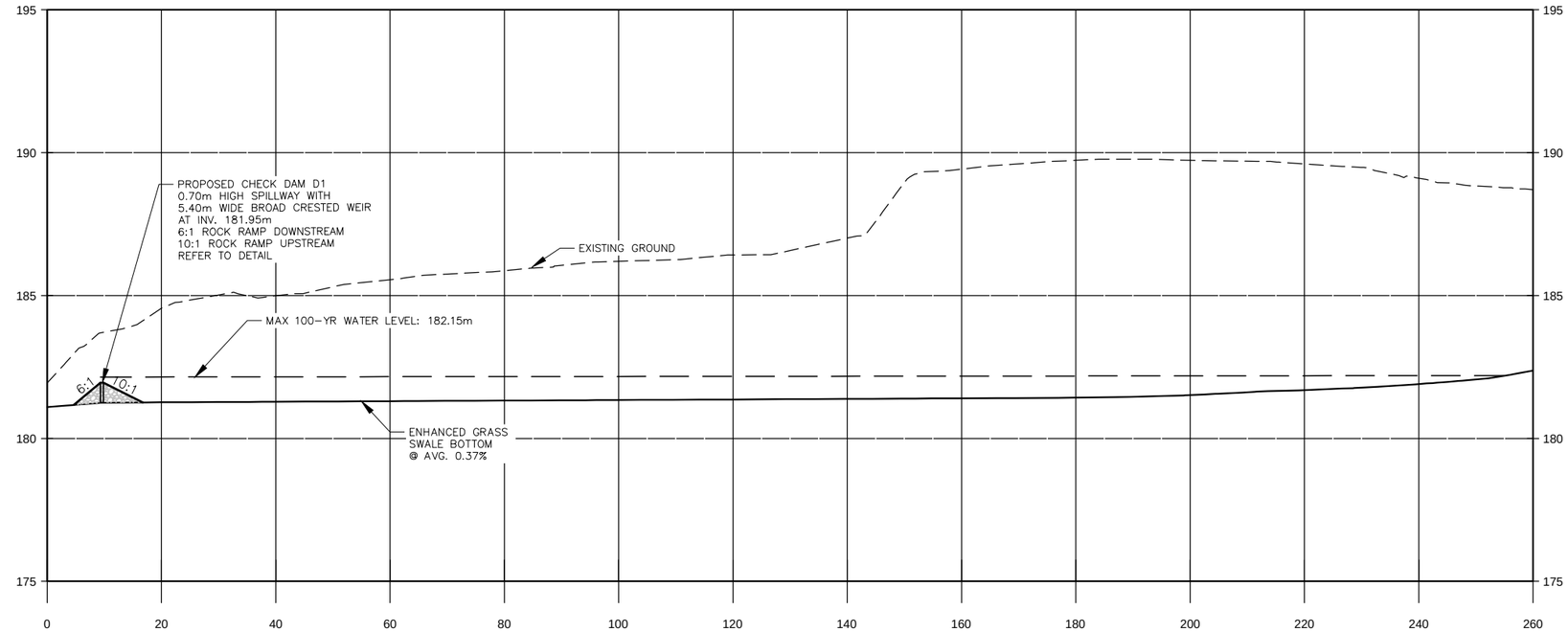

Enahnced Grass Swale D A-A

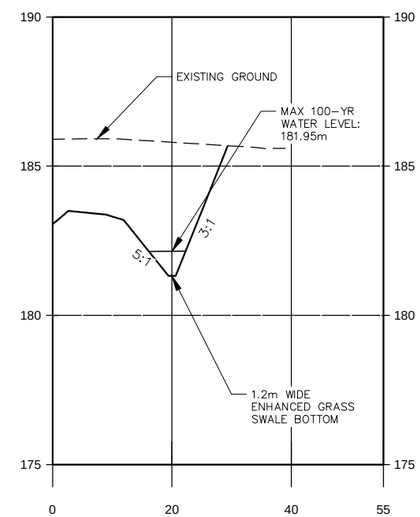

Enahnced Grass Swale D B-B

NO.	DATE	REVISIONS	BY	CHK	LEAD. DISC.	PROJ. MAN.
A	19/01/25	90% SUBMISSION TO CA				

SCALE :

1m 0 2m
Metres
VERTICAL

5m 0 10m
Metres
HORIZONTAL

CONSULTANT

	NAME (PRINT)	INIT.	DATE
DESIGNED	JUAN LOPEZ		
DRAWN	JAMIE HUANG-HADI ABBASI		
CHECKED	JUAN LOPEZ		
APPROVED LEAD ENGINEER	JUAN LOPEZ		
APPROVED PROJ. MANAGER	PETER BAMFORTH		

Ontario

link427
LOCAL | INTEGRATED | NEIGHBOURLY | KNOWLEDGEABLE

TITLE

HWY 427 EXPANSION
ENHANCED GRASS SWALE SECTION
CHECK DAM D1

PROJECT ID.	STAGE INDENTIFIER	DESIGN PACKAGE NUMBER	DISCIPLINE	STRUCTURE NUMBER	DOCUMENT TYPE	DRAWING NUMBER	REVISION NUMBER
H427-D	F	6	WAT	000	DWG	2225	A

RAINBOW CREEK

1200ø

W-S RAMP

SBL

525ø

450ø

℄ HIGHWAY 427

NBL

PROPOSED CHECK DAM E1
0.70m HIGH SPILLWAY WITH
4.73m WIDE BROAD CRESTED WEIR
AT INV. 182.40m
10:1 ROCK RAMP DOWNSTREAM
6:1 ROCK RAMP UPSTREAM
REFER TO DETAIL

MAX 100 YEAR WATER LEVEL: 182.60m

S-E/W RAMP

38 39 40 41 49 50

A B

KEY MAP

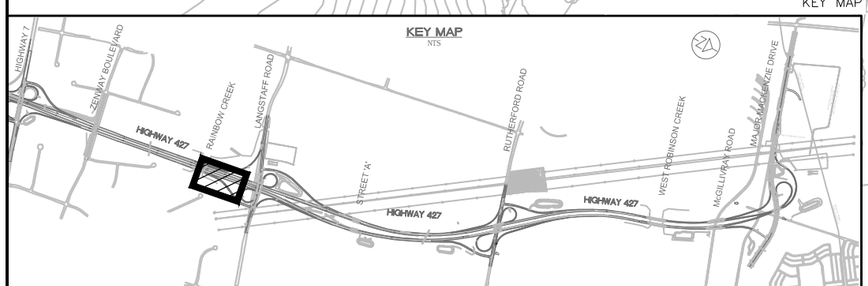

NO.	DATE	REVISIONS	BY	CHK	LEAD. DISC.	PROJ. MAN.
A	19/01/25	90% SUBMISSION TO CA				

SCALE :

5m 0 10m
Metres
HORIZONTAL

CONSULTANT

	NAME (PRINT)	INIT.	DATE
DESIGNED	JUAN LOPEZ		
DRAWN	JAMIE HUANG		
CHECKED	JUAN LOPEZ		
APPROVED LEAD ENGINEER	JUAN LOPEZ		
APPROVED PROJ. MANAGER	PETER BAMFORTH		

Ontario

link427
LOCAL | INTEGRATED | NEIGHBOURLY | KNOWLEDGEABLE

TITLE

HWY 427 EXPANSION
ENHANCED GRASS SWALE
CHECK DAM E1

PROJECT ID.	STAGE INDENTIFIER	DESIGN PACKAGE NUMBER	DISCIPLINE	STRUCTURE NUMBER	DOCUMENT TYPE	DRAWING NUMBER	REVISION NUMBER
H427-D	F	6	WAT	000	DWG	2226	A

POB 11+032.785

POB 9+971.376

POE 10+000.000
R=3496.13

A=375

CONCRETE HEADWALL
PER OPSD 804.040
GRATE PER OPSD 804.050

P03-3, 825 mm
95.0m @ 1.0%

OPSD-701.013
2400mmø MH 120
TOP FRAME ELEV. 192.16m
W INV. 187.20m (825mmø)
E INV. 187.20m (825mmø)

SEE DWG. 2201

KEY MAP

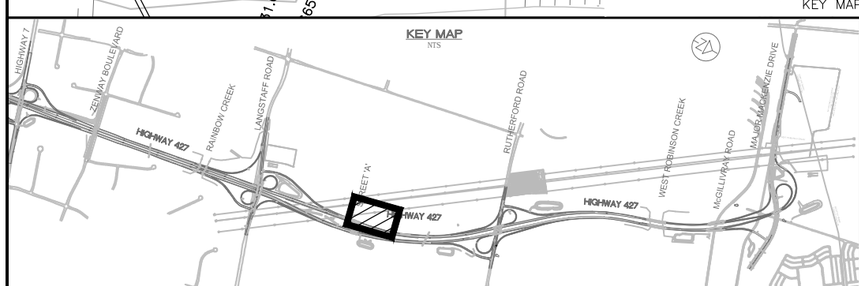

NO.	DATE	REVISIONS	BY	CHK	LEAD. DISC.	PROJ. MAN.
C	19/01/25	50% SUBMISSION TO CA				
B	18/10/04	50% SUBMISSION TO CA				
A	18/04/25	50% SUBMISSION TO CA				

SCALE :
5m 0 10m
Metres
HORIZONTAL

CONSULTANT

	NAME (PRINT)	INIT.	DATE
DESIGNED	JUAN LOPEZ		
DRAWN	JAMIE HUANG		
CHECKED	JUAN LOPEZ		
APPROVED LEAD ENGINEER	JUAN LOPEZ		
APPROVED PROJ. MANAGER	PETER BAMFORTH		

Ontario

link427
LOCAL | INTEGRATED | NEIGHBOURLY | KNOWLEDGEABLE

TITLE
HWY 427 EXPANSION
DRY POND 3
STATION 13+100

PROJECT ID.	STAGE IDENTIFIER	DESIGN PACKAGE NUMBER	DISCIPLINE	STRUCTURE NUMBER	DOCUMENT TYPE	DRAWING NUMBER	REVISION NUMBER
H427-D	F	7	WAT	000	DWG	2200	C

SEE DWG. 2200

OPSD–701.013
2400mmø MH 120
TOP FRAME ELEV. 192.16m
W INV. 187.20m (825mmø)
E INV. 187.20m (825mmø)

R=2207.60

11+200

13+100

13+200

13+000

20+574

825ø

P03–4, 825mm
114.0m @ 1.0%

TIE INTO DITCH
ELEV. 187.60m

W042, 1050mmø
22.60m @ 0.35%

TIE INTO POND
ELEV. 187.52m

RIP RAP PROTECTION AS PER OPSD 810.010

RIP RAP PROTECTION AS
PER OPSD 810.010

FLOW DIVERSION BERM
TOP ELEV. 187.58

DRY POND 3

POND BOTTOM: 186.18m

100–YR WATER LEVEL: 187.58m

FREEBOARD: 187.88m

4:1

2.5:1

2.0%

3:1

2.0m WIDE EMERGENCY OVERFLOW SPILLWAY
WEIR CREST ELEV. 187.58m
RIP RAP PROTECTION AS PER OPSD 810.010
RIP RAP R–50

2.0m WIDE EMERGENCY
OVERFLOW SPILLWAY @ 0.80%

P03–2, 825mmø
24.0m @ 0.4%

OPSD–701.013
2400mmø MH 121
TOP FRAME ELEV. 187.71m
S INV. 186.11m (825mmø)
W INV. 185.90m (825mmø)
E INV. 185.88m (825mmø)

MATCH TO EXISTING GROUND
ELEV. 187.28m

3.0m ACCESS ROAD
EDGE: 187.94m

P03–1, 825mmø
8.0m @ 0.5%

MEADOW MARSH WITHIN DRY POND
300mm BIOSWALE PLANTING SOIL

OPSD–701.011
1500mmø CONTROL MH 122
TOP FRAME ELEV. 187.58m
S INV. 186.11m (825mmø)
N INV. 186.11m (825mmø)

1.50m WIDE WEIR CREST 186.84m
C/W 80mmø ORIFICE INV. 186.11m
REFER TO DETAIL

P03–6, 825mmø
27.0m @ 1.26%

RIP RAP PROTECTION AS
PER OPSD 810.010

DISCHARGE TO
ROBINSON CREEK

(FUTURE SANITARY IN 1050 LINER)

(FUTURE WATERMAIN)

(FUTURE STORM SEWER)

N 4 850 800

N 4 851 000

N 4 851 100

KEY MAP

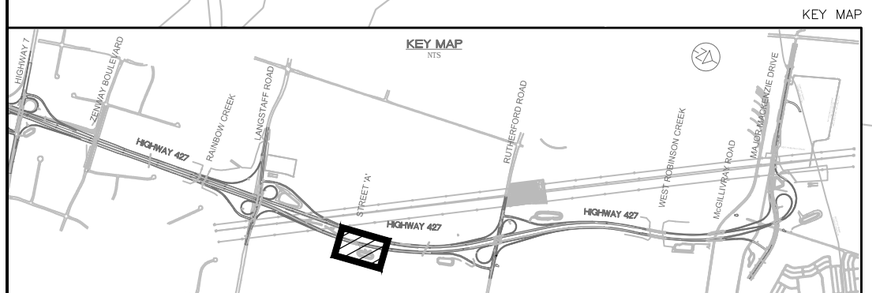

NO.	DATE	REVISIONS	BY	CHK	LEAD. DISC.	PROJ. MAN.
C	19/01/25	50% SUBMISSION TO CA				
B	18/10/04	50% SUBMISSION TO CA				
A	18/04/25	50% SUBMISSION TO CA				

SCALE :

5m 0 10m
Metres
HORIZONTAL

CONSULTANT	NAME (PRINT)	INIT.	DATE
DESIGNED	JUAN LOPEZ		
DRAWN	JAMIE HUANG		
CHECKED	JUAN LOPEZ		
APPROVED LEAD ENGINEER	JUAN LOPEZ		
APPROVED PROJ. MANAGER	PETER BAMFORTH		

Ontario

link427
LOCAL | INTEGRATED | NEIGHBOURLY | KNOWLEDGEABLE

TITLE

HWY 427 EXPANSION
DRY POND 3
STATION 13+100

PROJECT ID.	STAGE INDENTIFIER	DESIGN PACKAGE NUMBER	DISCIPLINE	STRUCTURE NUMBER	DOCUMENT TYPE	DRAWING NUMBER	REVISION NUMBER
H427–D	F	7	WAT	000	DWG	2201	C

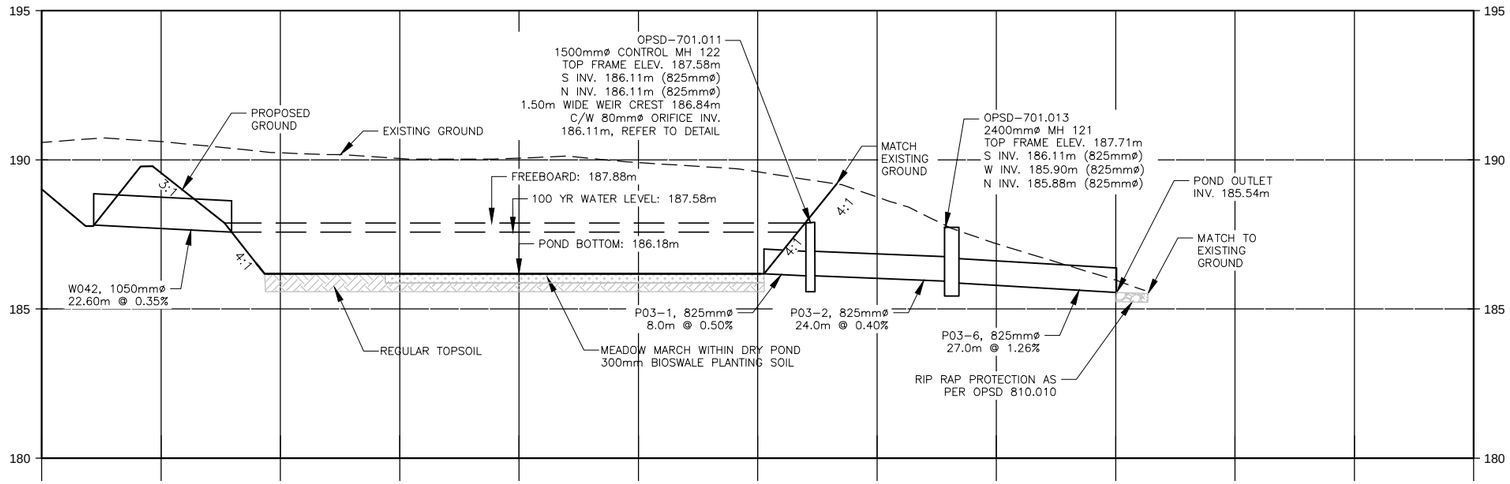

Pond 3 A-A

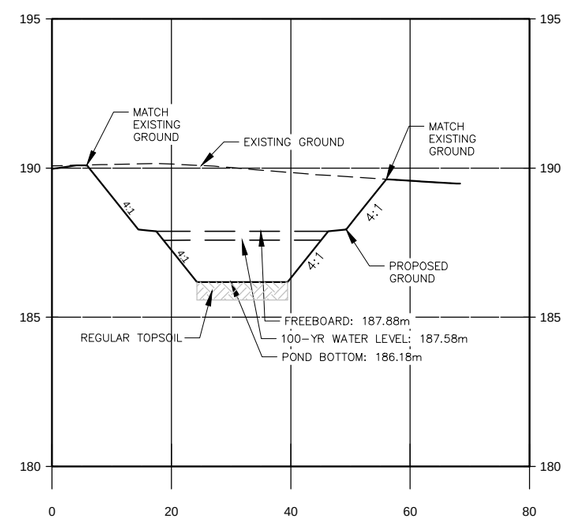

Pond 3 B-B

NO.	DATE	REVISIONS	BY	CHK	LEAD. DISC.	PROJ. MAN.
C	19/01/25	50% SUBMISSION TO CA				
B	18/10/04	50% SUBMISSION TO CA				
A	18/04/25	50% SUBMISSION TO CA				

SCALE :

1m 0 2m
Metres VERTICAL

5m 0 10m
Metres HORIZONTAL

CONSULTANT	NAME (PRINT)	INIT.	DATE
DESIGNED	JUAN LOPEZ		
DRAWN	JAMIE HUANG		
CHECKED	JUAN LOPEZ		
APPROVED LEAD ENGINEER	JUAN LOPEZ		
APPROVED PROJ. MANAGER	PETER BAMFORTH		

Ontario

link427
LOCAL | INTEGRATED | NEIGHBOURLY | KNOWLEDGEABLE

TITLE

HWY 427 EXPANSION
POND SECTION
DRY POND 3
STATION 13+100

PROJECT ID.	STAGE INDENTIFIER	DESIGN PACKAGE NUMBER	DISCIPLINE	STRUCTURE NUMBER	DOCUMENT TYPE	DRAWING NUMBER	REVISION NUMBER
H427-D	F	7	WAT	000	DWG	2202	C

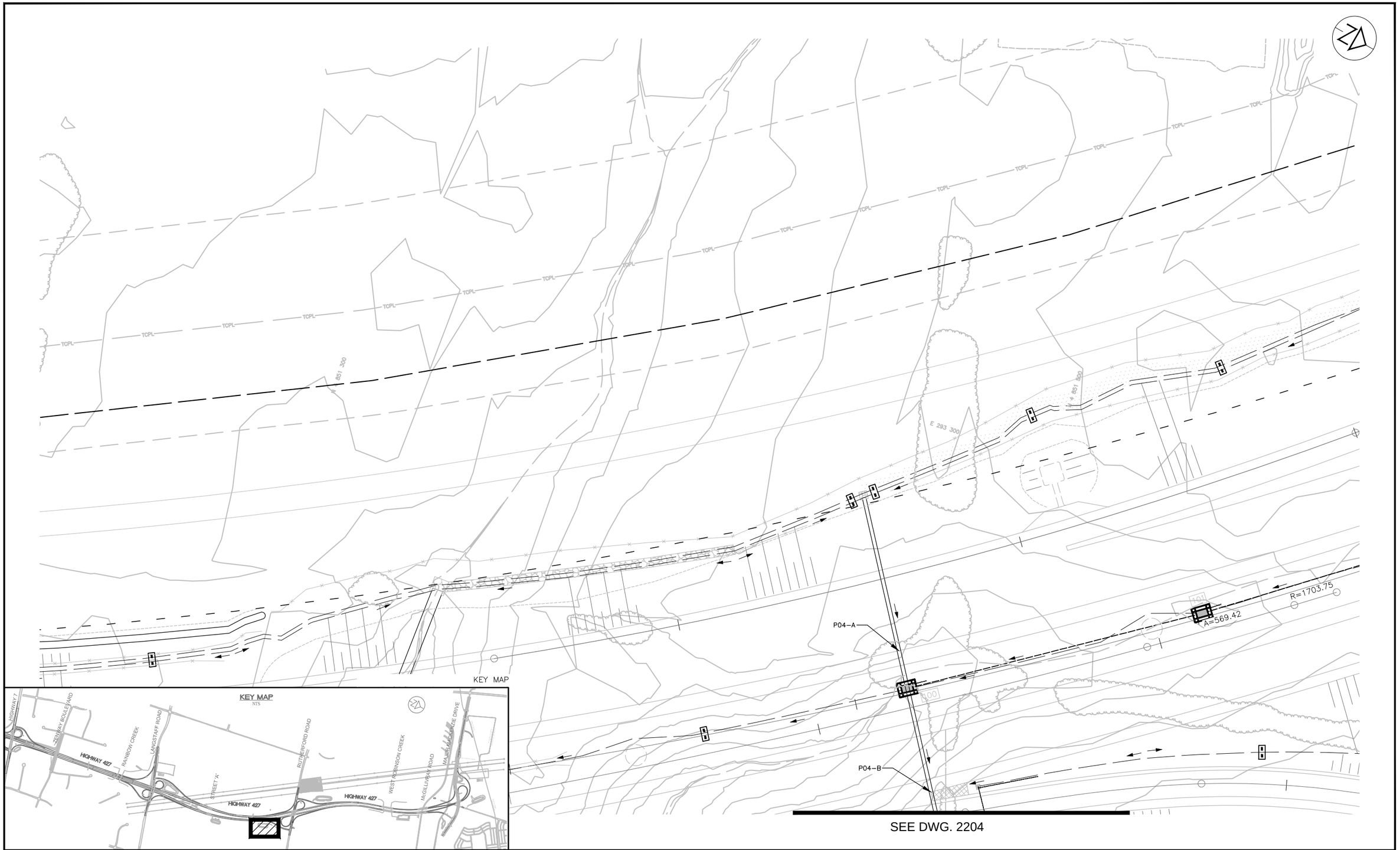

SEE DWG. 2204

NO.	DATE	REVISIONS	BY	CHK	LEAD. DISC.	PROJ. MAN.
C	19/01/25	50% SUBMISSION TO CA				
B	18/10/04	50% SUBMISSION TO CA				
A	18/04/25	50% SUBMISSION TO CA				

SCALE :

5m 0 10m

Metres
HORIZONTAL

CONSULTANT

	NAME (PRINT)	INIT.	DATE
DESIGNED	JUAN LOPEZ		
DRAWN	JAMIE HUANG		
CHECKED	JUAN LOPEZ		
APPROVED LEAD ENGINEER	JUAN LOPEZ		
APPROVED PROJ. MANAGER	PETER BAMFORTH		

Ontario

link427
LOCAL | INTEGRATED | NEIGHBOURLY | KNOWLEDGEABLE

TITLE

HWY 427 EXPANSION
DRY POND 4
STATION 13+700

PROJECT ID.	STAGE INDENTIFIER	DESIGN PACKAGE NUMBER	DISCIPLINE	STRUCTURE NUMBER	DOCUMENT TYPE	DRAWING NUMBER	REVISION NUMBER
H427–D	F	7	WAT	000	DWG	2203	C

SEE DWG. 2203

P04–B

TIE INTO DITCH
ELEV. 190.70m

RIP RAP PROTECTION AS
PER OPSD 810.010

A54, TWIN CULVERTS
6.4m – 825mmø
@ 0.50%

TIE INTO POND
ELEV. 190.67m

U051

TIE INTO EXISTING
GROUND ELEV.
188.76m

RIP RAP PROTECTION AS
PER OPSD 810.010

P04–2, 34.0m –
825mmø @0.90%

OPSD–701.012
1800mmø CONTROL MH 4–1
TOP FRAME ELEV. 190.60m
N INV. 189.07m (825mmø)
S INV. 189.07m (825mmø)
N INV. 188.30m (200mmø)

1.8m WIDE WEIR CREST 189.80m
C/W 105mmø ORIFICE INV. 189.07m
200mmø BACKWATER VALVE
INV. 188.30m
REFER TO DETAIL

P04–1, 13.3m –
825mmø @ 1.00%

RIP RAP PROTECTION
AS PER OPSD 810.010

MEADOW MARSH WITHIN DRY POND
300mm BIOSWALE PLANTING SOIL

FLOW DIVERSION BERM
TOP ELEV. 190.60m

DRY POND 4

FREEBOARD: 190.90m

EDGE OF ACCESS ROAD: 190.60m

100–YR WATER LEVEL: 190.60m

POND BOTTOM: 189.20m

3.0m ACCESS ROAD

5.0m WIDE EMERGENCY OVERFLOW SPILLWAY
WEIR CREST ELEV. 190.60m
RIP RAP PROTECTION AS PER OPSD 810.010
RIP RAP R–50

5.0m WIDE
EMERGENCY OVERFLOW
SPILLWAY @ 0.30%

MATCH TO EXISTING GROUND
ELEV. 190.41m

R=15

R=201.5

KEY MAP

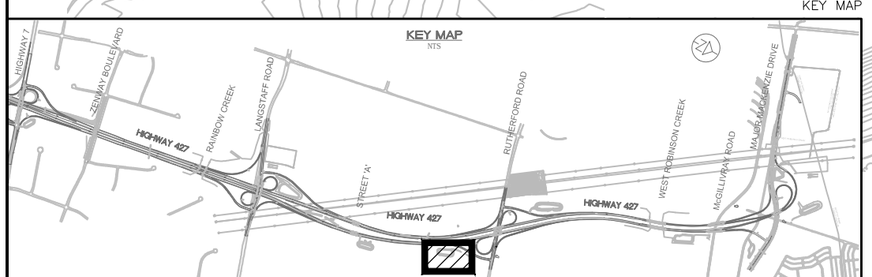

NO.	DATE	REVISIONS	BY	CHK	LEAD. DISC.	PROJ. MAN.
C	19/01/25	50% SUBMISSION TO CA				
B	18/10/04	50% SUBMISSION TO CA				
A	18/04/25	50% SUBMISSION TO CA				

SCALE :

5m 0 10m
Metres
HORIZONTAL

CONSULTANT

	NAME (PRINT)	INIT.	DATE
DESIGNED	JUAN LOPEZ		
DRAWN	JAMIE HUANG		
CHECKED	JUAN LOPEZ		
APPROVED LEAD ENGINEER	JUAN LOPEZ		
APPROVED PROJ. MANAGER	PETER BAMFORTH		

Ontario

link427
LOCAL | INTEGRATED | NEIGHBOURLY | KNOWLEDGEABLE

TITLE

HWY 427 EXPANSION
DRY POND 4
STATION 13+700

PROJECT ID.	STAGE INDENTIFIER	DESIGN PACKAGE NUMBER	DISCIPLINE	STRUCTURE NUMBER	DOCUMENT TYPE	DRAWING NUMBER	REVISION NUMBER
H427–D	F	7	WAT	000	DWG	2204	C

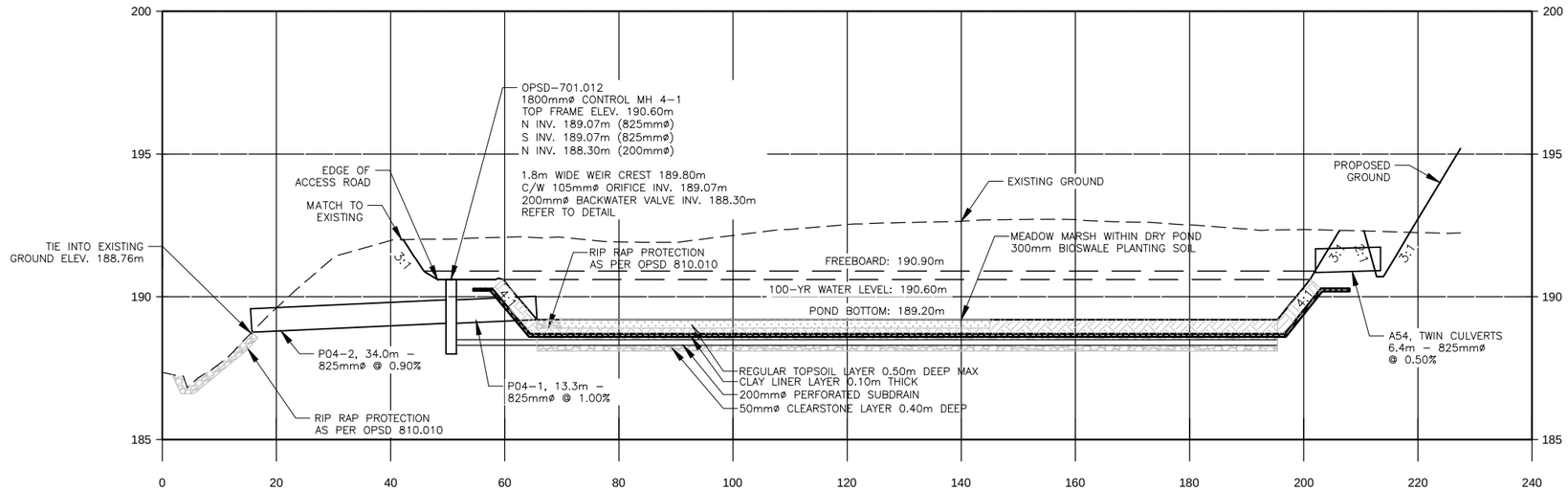

Pond 4 A-A

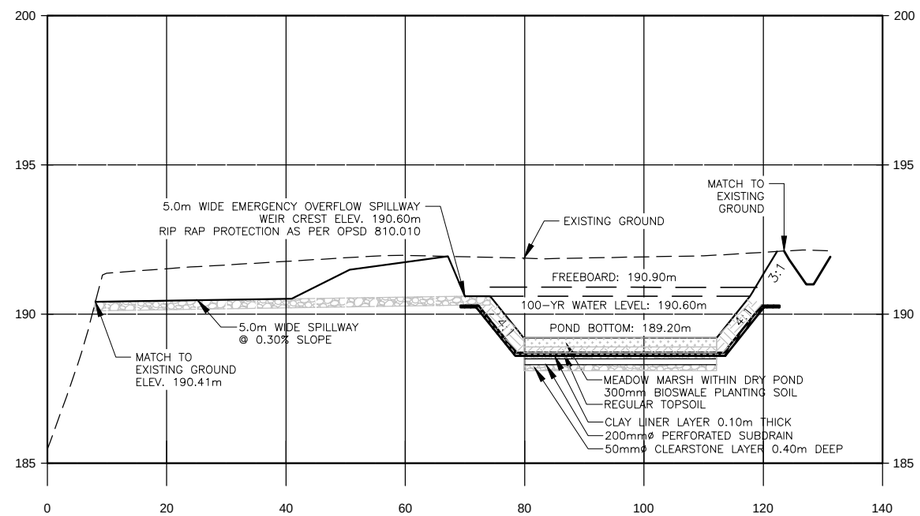

Pond 4 B-B

NO.	DATE	REVISIONS	BY	CHK	LEAD. DISC.	PROJ. MAN.
C	19/01/25	50% SUBMISSION TO CA				
B	18/10/04	50% SUBMISSION TO CA				
A	18/04/25	50% SUBMISSION TO CA				

SCALE :

1m 0 2m
Metres VERTICAL

5m 0 10m
Metres HORIZONTAL

CONSULTANT

	NAME (PRINT)	INIT.	DATE
DESIGNED	JUAN LOPEZ		
DRAWN	JAMIE HUANG		
CHECKED	JUAN LOPEZ		
APPROVED LEAD ENGINEER	JUAN LOPEZ		
APPROVED PROJ. MANAGER	PETER BAMFORTH		

Ontario

link427
LOCAL | INTEGRATED | NEIGHBOURLY | KNOWLEDGEABLE

TITLE

HWY 427 EXPANSION
POND SECTION
DRY POND 4
STATION 13+700

PROJECT ID.	STAGE INDENTIFIER	DESIGN PACKAGE NUMBER	DISCIPLINE	STRUCTURE NUMBER	DOCUMENT TYPE	DRAWING NUMBER	REVISION NUMBER
H427–D	F	7	WAT	000	DWG	2205	C

MEADOW MARSH WITHIN DRY POND
300mm BIOSWALE PLANTING SOIL

OPSD-701.013
2400mmø CONTROL MH 123
TOP FRAME ELEV. 194.03m
W INV. 191.87m (1200mmø)
E INV. 191.85m (1500mmø)
W INV. 191.10m (200mmø)

2.4m WIDE WEIR CREST 192.45m
C/W 120mmø ORIFICE INV. 191.87m
200mmø BACKWATER VALVE INV. 191.10m
REFER TO DETAIL

RIP RAP PROTECTION AS PER OPSD 810.010

3.0m ACCESS ROAD

FREEBOARD: 194.00m
REGIONAL WATER LEVEL: 193.04m
100-YR WATER LEVEL: 192.90m
POND BOTTOM: 192.00m

DRY POND 5

FLOW DIVERSION BERM
TOP ELEV. 192.90m

P05-1, 10m –
1200mmø @1.3%

P05-2, 65.9m –
1500mmø @0.6%

TIE INTO POND
ELEV. 193.92m

A56, TWIN CULVERTS
12.90m – 825mmø
@ 0.27%

TIE INTO DITCH
ELEV. 193.95m

RIP RAP PROTECTION AS PER OPSD 810.010

U102

U085

W029

W022

N-E/W RAMP

N-E/W RAMP

R=30

A=375

6m –
@0.1%

OPSD-701.013

SEE DWG. 2207

KEY MAP
NTS

HIGHWAY 427
HIGHWAY 427
HIGHWAY 427
HIGHWAY 7
ZENWAY BOULEVARD
RAINBOW CREEK
LANGSTAFF ROAD
STREET 'A'
RUTHERFORD ROAD
WEST ROBINSON CREEK
McGILLIVRAY ROAD
MAJOR MACKENZIE DRIVE

NO.	DATE	REVISIONS	BY	CHK	LEAD. DISC.	PROJ. MAN.
C	19/01/25	50% SUBMISSION TO CA				
B	18/10/04	50% SUBMISSION TO CA				
A	18/4/25	50% SUBMISSION TO CA				

SCALE :
5m 0 10m
Metres
HORIZONTAL

CONSULTANT

	NAME (PRINT)	INIT.	DATE
DESIGNED	JUAN LOPEZ		
DRAWN	JAMIE HUANG-HADI ABBASI		
CHECKED	JUAN LOPEZ		
APPROVED LEAD ENGINEER	JUAN LOPEZ		
APPROVED PROJ. MANAGER	PETER BAMFORTH		

Ontario

link427
LOCAL | INTEGRATED | NEIGHBOURLY | KNOWLEDGEABLE

TITLE
HWY 427 EXPANSION
DRY POND 5
STATION 14+600

PROJECT ID.	STAGE INDENTIFIER	DESIGN PACKAGE NUMBER	DISCIPLINE	STRUCTURE NUMBER	DOCUMENT TYPE	DRAWING NUMBER	REVISION NUMBER
H427-D	F	7	WAT	000	DWG	2206	C

SEE DWG. 2206

9+900

E-S RAMP

SBL

P05-3, 63.6m
1500mmø @0.1%

0 340

0 360

OPSD-701.013
2400mmø CONTROL MH 124
TOP FRAME ELEV. 199.65m
W INV. 191.43m (1500mmø)
E INV. 191.43m (1500mmø)

124

0 380

A21

℄ HIGHWAY 427

NBL

0 400

E-N RAMP

0 420

P05-4, 157m
1500mmø @0.5%

0 440

0 460

0 480

0 500

PLUNGE POOL
0.5m DEEP MIN
2:1 SIDE SLOPE
SEE TYPICAL DETAIL

CONCRETE HEADWALL
PER OPSD 804.040
GRATE PER OPSD 804.050

RIP RAP PROTECTION AS PER OPSD 810.010

0 540

547

B

KEY MAP
NTS

HIGHWAY 7
ZENWAY BOULEVARD
HIGHWAY 427
RAINBOW CREEK
LANGSTAFF ROAD
STREET 'A'
RUTHERFORD ROAD
WEST ROBINSON CREEK
MCCLUVEY ROAD
MAJOR MACKENZIE DRIVE

NO.	DATE	REVISIONS	BY	CHK	LEAD. DISC.	PROJ. MAN.
C	19/01/25	50% SUBMISSION TO CA				
B	18/10/04	50% SUBMISSION TO CA				
A	18/04/25	50% SUBMISSION TO CA				

SCALE :

5m 0 10m

Metres
HORIZONTAL

CONSULTANT

	NAME (PRINT)	INIT.	DATE
DESIGNED	JUAN LOPEZ		
DRAWN	JAMIE HUANG-HADI ABBASI		
CHECKED	JUAN LOPEZ		
APPROVED LEAD ENGINEER	JUAN LOPEZ		
APPROVED PROJ. MANAGER	PETER BAMFORTH		

Ontario

link427
LOCAL | INTEGRATED | NEIGHBOURLY | KNOWLEDGEABLE

TITLE

HWY 427 EXPANSION
DRY POND 5
STATION 14+600

PROJECT ID.	STAGE INDENTIFIER	DESIGN PACKAGE NUMBER	DISCIPLINE	STRUCTURE NUMBER	DOCUMENT TYPE	DRAWING NUMBER	REVISION NUMBER
H427-D	F	7	WAT	000	DWG	2207	C

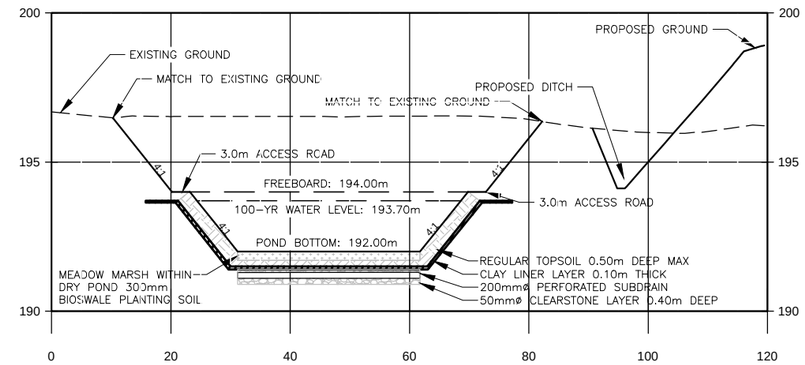

Pond 5 A-A

NO.	DATE	REVISIONS	BY	CHK	LEAD. DISC.	PROJ. MAN.
C	19/01/25	50% SUBMISSION TO CA				
B	18/10/04	50% SUBMISSION TO CA				
A	18/04/25	50% SUBMISSION TO CA				

SCALE :

1m 0 2m
Metres VERTICAL

5m 0 10m
Metres HORIZONTAL

CONSULTANT

	NAME (PRINT)	INIT.	DATE
DESIGNED	JUAN LOPEZ		
DRAWN	JAMIE HUANG-HADI ABBASI		
CHECKED	JUAN LOPEZ		
APPROVED LEAD ENGINEER	JUAN LOPEZ		
APPROVED PROJ. MANAGER	PETER BAMFORTH		

Ontario

link427
LOCAL | INTEGRATED | NEIGHBOURLY | KNOWLEDGEABLE

TITLE

HWY 427 EXPANSION
POND SECTION
DRY POND 5
STATION 14+600

PROJECT ID.	STAGE INDENTIFIER	DESIGN PACKAGE NUMBER	DISCIPLINE	STRUCTURE NUMBER	DOCUMENT TYPE	DRAWING NUMBER	REVISION NUMBER
H427-D	F	7	WAT	000	DWG	2208	C

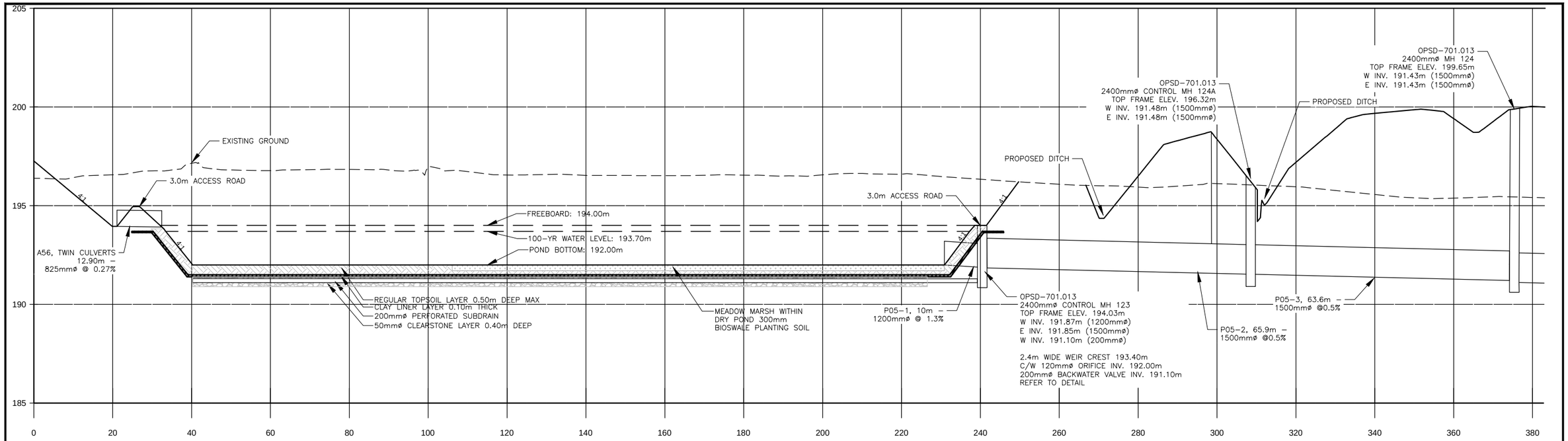

Pond 5 B-B

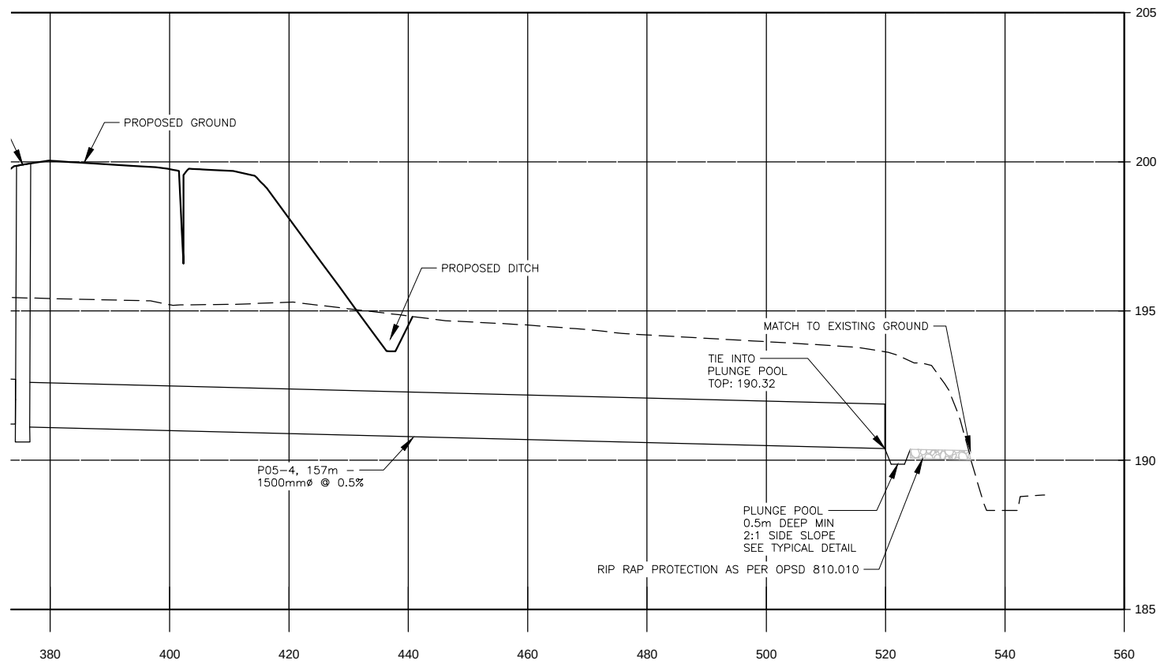

Pond 5 B-B

NO.	DATE	REVISIONS	BY	CHK	LEAD. DISC.	PROJ. MAN.
C	19/01/25	50% SUBMISSION TO CA				
B	18/10/04	50% SUBMISSION TO CA				
A	18/04/25	50% SUBMISSION TO CA				

SCALE :

1m 0 2m
Metres VERTICAL

5m 0 10m
Metres HORIZONTAL

CONSULTANT

	NAME (PRINT)	INIT.	DATE
DESIGNED	JUAN LOPEZ		
DRAWN	JAMIE HUANG–HADI ABBASI		
CHECKED	JUAN LOPEZ		
APPROVED LEAD ENGINEER	JUAN LOPEZ		
APPROVED PROJ. MANAGER	PETER BAMFORTH		

Ontario

link427
LOCAL | INTEGRATED | NEIGHBOURLY | KNOWLEDGEABLE

TITLE

HWY 427 EXPANSION
POND SECTION
DRY POND 5
STATION 14+600

PROJECT ID.	STAGE INDENTIFIER	DESIGN PACKAGE NUMBER	DISCIPLINE	STRUCTURE NUMBER	DOCUMENT TYPE	DRAWING NUMBER	REVISION NUMBER
H427–D	F	7	WAT	000	DWG	2209	C

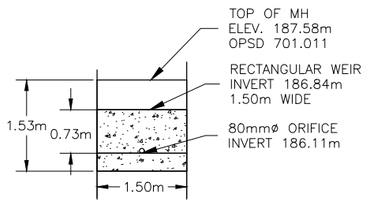

POND 3 INTERNAL MAINTENANCE HOLE OUTLET CONFIGURATION
1:100

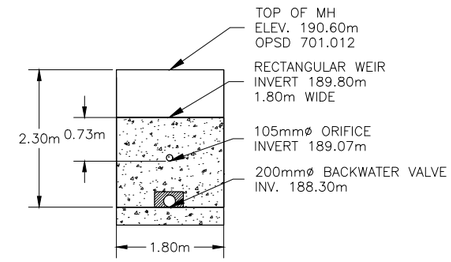

POND 4 INTERNAL MAINTENANCE HOLE OUTLET CONFIGURATION
1:100

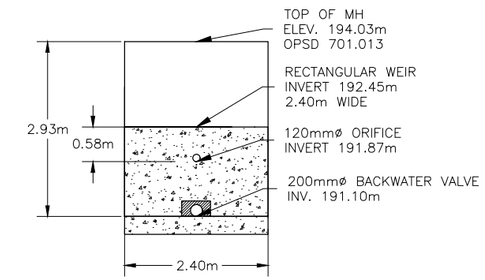

POND 5 INTERNAL MAINTENANCE HOLE OUTLET CONFIGURATION
1:100

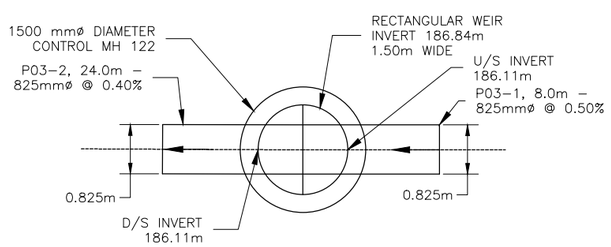

POND 3 INTERNAL MAINTENANCE HOLE BENCHING DETAILS
1:100

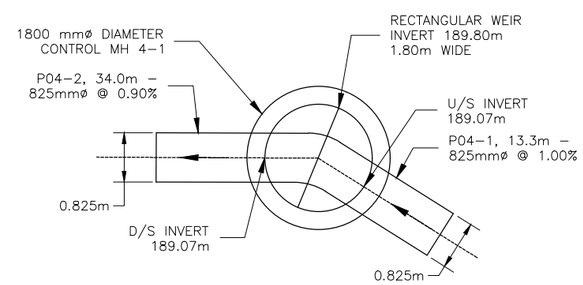

POND 4 INTERNAL MAINTENANCE HOLE BENCHING DETAILS
1:100

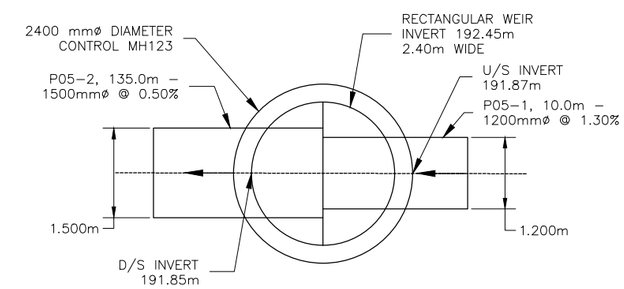

POND 5 INTERNAL MAINTENANCE HOLE BENCHING DETAILS
1:100

NO.	DATE	REVISIONS	BY	CHK	LEAD. DISC.	PROJ. MAN.
C	19/01/25	50% SUBMISSION TO CA				
B	18/10/04	50% SUBMISSION TO CA				

SCALE :

CONSULTANT	NAME (PRINT)	INIT.	DATE
DESIGNED	JUAN LOPEZ	J.L.	
DRAWN	JAMIE HUANG	J.H.	
CHECKED	JUAN LOPEZ	J.L.	
APPROVED LEAD ENGINEER	JUAN LOPEZ	J.L.	
APPROVED PROJ. MANAGER	PETER BAMFORTH	P.B.	

Ontario

link427
LOCAL | INTEGRATED | NEIGHBOURLY | KNOWLEDGEABLE

TITLE
HWY 427 EXPANSION
STORMWATER MANAGEMENT
DETAILS PACKAGE 7

PROJECT ID.	STAGE INDENTIFIER	DESIGN PACKAGE NUMBER	DISCIPLINE	STRUCTURE NUMBER	DOCUMENT TYPE	DRAWING NUMBER	REVISION NUMBER
H427–D	F	7	WAT	000	DWG	2214	C

	SWM POND PROPERTIES						RECEIVING WATERCOURSE		SWM POND INLET FACILITY							SWM POND OUTLET FACILITY							
DESIGN SEGMENT	POND ID	STATION	BOTTOM ELEVATION (m)	PERMANENT POOL (m)	100 YR WATER LEVEL	FREEBOARD (m)	2 YEAR WATER LEVEL (m)	100 YEAR WATER LEVEL (m)	ID	TYPE	DIAMETER (mm)	UPSTREAM INVERT(m)	LENGTH (m)	SLOPE	DOWNSTREAM INVERT (m)	ID	TYPE / SPECIFICATION[1]	DIAMETER (mm)	UPSTREAM INVERT(m)	LENGTH (m)	SLOPE	DOWNSTREAM INVERT (m)	NOTES: OUTLET CONFIGURATION
L-4	3	13+100	186.18	N/A	187.58	187.88	178.75	179.53	W042	SEE CULVERT DESIGN TABLE						DIMH119 to MH120 (P03-3 / ROB-1 bypass)	65-D	825	188.03	95.0	1.0%	187.09	
																DIMH120 to MH121 (P03-4 / ROB-1 bypass)	100-D	825	187.07	114.0	1.0%	185.98	
																Headwall to DIMH122 (P03-1/ ROB-1 bypass)	65-D	825	186.18	6.9	1.0%	186.11	
																MH122	701.011	1500					80mm ORIFICE INV. 186.111m 1.50m WIDE WEIR CREST ELEV. 186.84m
																DIMH122 to MH123 (P03-2)	140-D	825	186.11	24.0	0.4%	185.88	
																MH123 to Headwall (P03-6)	100-D	825	185.88	27.0	1.3%	185.54	
	4	13+700	189.20	N/A	190.60	190.90	181.61	182.20	A54 (Twin)	CL-65D	825 x 2	190.72	11.4	0.60%	190.85	P04-1	65-D	825	189.20	13.3	1.0%	189.07	
																MH4-1	701.012	1800					105mm ORIFICE INV. 189.07m 1.80m WIDE WEIR CREST ELEV. 189.80m 200mm BACKWATER VALVE INV, 188.30m
																P04-2	140-D	825	189.07	34.0	0.9%	188.76	
	5	14+600	192.00	N/A	193.00	193.30	189.04	189.67	A56 (Twin)	SEE CULVERT DESIGN TABLE						Headwall to MH123 (P05-1)	100-D	1200	192.00	10.0	1.3%	191.87	
																MH123	701.013	2400	-	-	-	-	120mm ORIFICE INV. 191.87m 2.40m WIDE WEIR CREST ELEV. 192.45m 200mm BACKWATER VALVE INV, 191.10m
																DIMH123 to MH124A (P05-2)	140-D	1500	191.85	65.9	0.6%	191.48	
																DIMH124A to MH124 (P05-3)	140-D	1500	191.48	63.6	0.1%	191.43	
																MH124 to Headwall (P05-4)	140-D	1500	191.43	157.0	0.7%	190.32	

NOTES
1) Class B Bedding for Pipes

NO.	DATE	REVISIONS	BY	CHK	LEAD. DISC.	PROJ. MAN.
C	19/01/25	50% SUBMISSION TO CA				
B	18/10/04	50% SUBMISSION TO CA				

SCALE :

CONSULTANT

	NAME (PRINT)	INIT.	DATE
DESIGNED	JUAN LOPEZ	J.L.	
DRAWN	JAMIE HUANG	J.H.	
CHECKED	JUAN LOPEZ	J.L.	
APPROVED LEAD ENGINEER	JUAN LOPEZ	J.L.	
APPROVED PROJ. MANAGER	PETER BAMFORTH	P.B.	

Ontario

link427
LOCAL | INTEGRATED | NEIGHBOURLY | KNOWLEDGEABLE

TITLE
HWY 427 EXPANSION
STORMWATER MANAGEMENT FACILITY TABLE PACKAGE 7

PROJECT ID.	STAGE INDENTIFIER	DESIGN PACKAGE NUMBER	DISCIPLINE	STRUCTURE NUMBER	DOCUMENT TYPE	DRAWING NUMBER	REVISION NUMBER
H427–D	F	7	WAT	000	DWG	2215	C

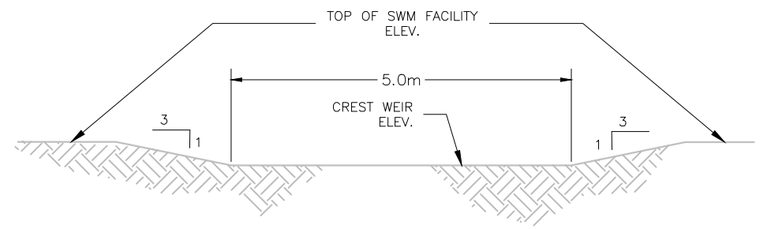

TYPICAL OVERFLOW WEIR SECTION

N.T.S.

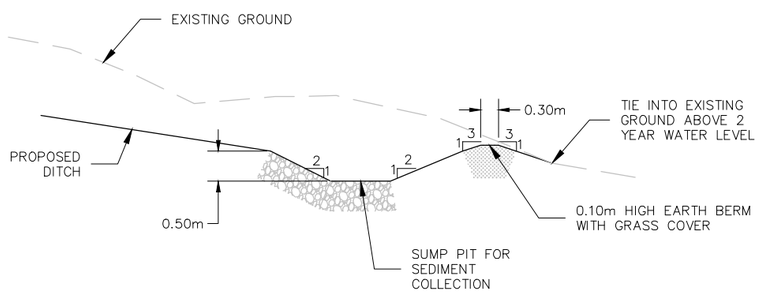

NOTES:

1. WIDTH AND LENGTH OF SUMP PIT BOTTOM TO BE PIPE DIAMETER + 1.2m OR EQUIVALENT TO THE INCOMING FLAT BOTTOM DITCH WIDTH.

TYPICAL FLOW SPREADER PROFILE DETAIL

1:100

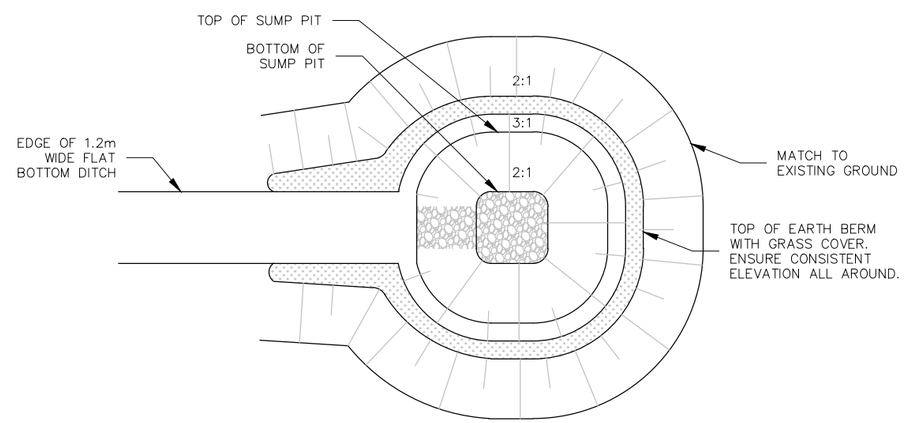

TYPICAL FLOW SPREADER PLAN DETAIL

1:100

NO.	DATE	REVISIONS	BY	CHK	LEAD. DISC.	PROJ. MAN.
C	19/01/25	50% SUBMISSION TO CA				

SCALE :

0.5m 0 1m

Metres
HORIZONTAL

CONSULTANT

	NAME (PRINT)	INIT.	DATE
DESIGNED	JUAN LOPEZ	J.L.	
DRAWN	JAMIE HUANG	J.H.	
CHECKED	JUAN LOPEZ	J.L.	
APPROVED LEAD ENGINEER	JUAN LOPEZ	J.L.	
APPROVED PROJ. MANAGER	PETER BAMFORTH	P.B.	

Ontario

link427
LOCAL | INTEGRATED | NEIGHBOURLY | KNOWLEDGEABLE

TITLE

HWY 427 EXPANSION
STORMWATER MANAGEMENT
DETAILS

PROJECT ID.	STAGE INDENTIFIER	DESIGN PACKAGE NUMBER	DISCIPLINE	STRUCTURE NUMBER	DOCUMENT TYPE	DRAWING NUMBER	REVISION NUMBER
H427–D	F	7	WAT	000	DWG	2216	C

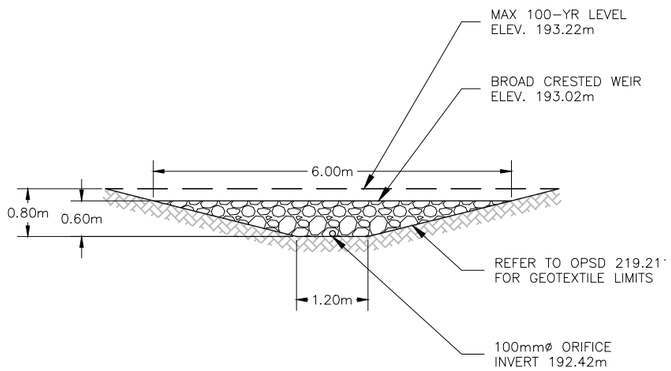

CHECK DAM F1
OUTLET CONFIGURATION
1:100

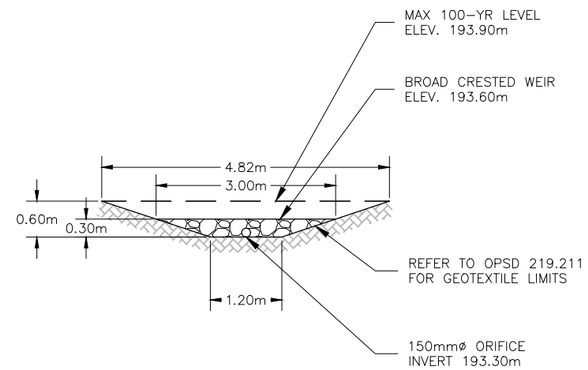

CHECK DAM F2
OUTLET CONFIGURATION
1:100

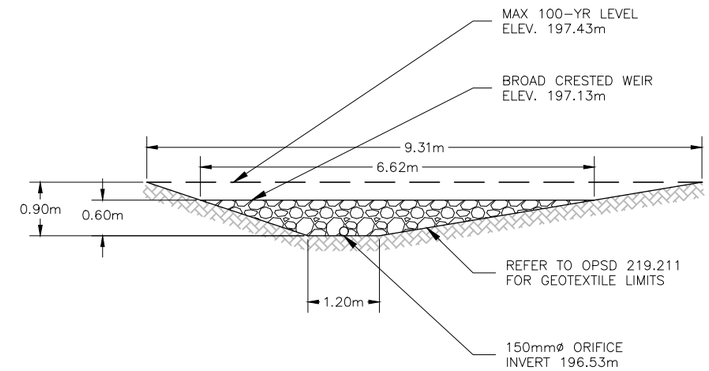

CHECK DAM F3
OUTLET CONFIGURATION
1:100

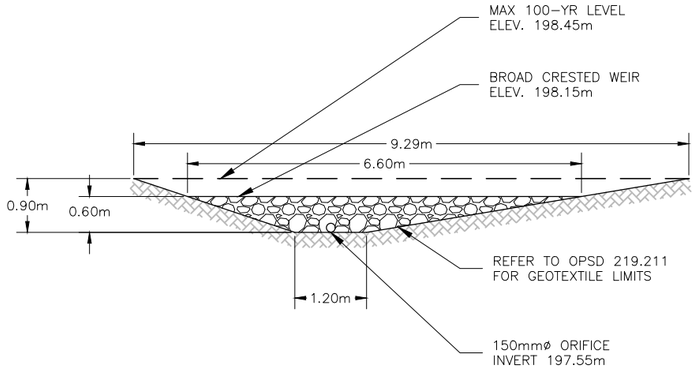

CHECK DAM F4
OUTLET CONFIGURATION
1:100

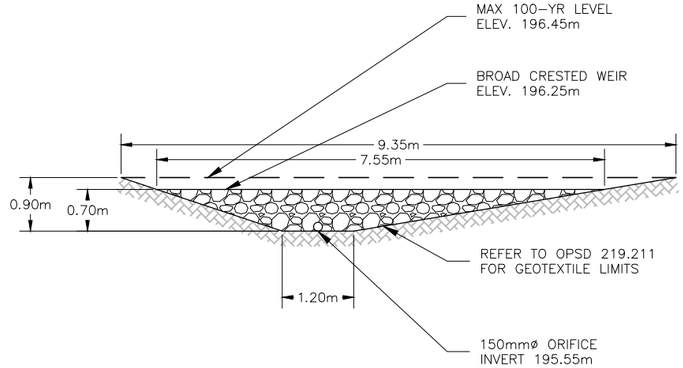

CHECK DAM F5
OUTLET CONFIGURATION
1:100

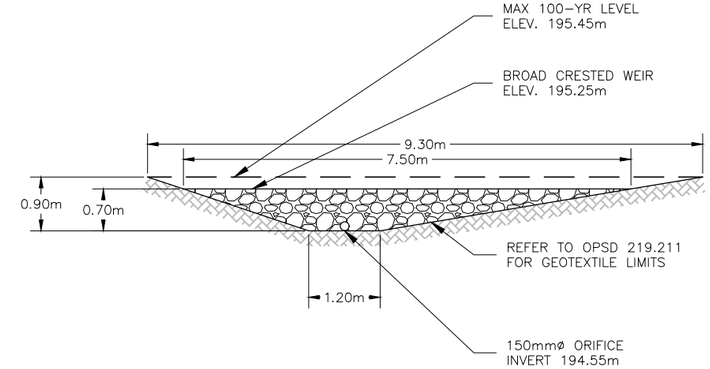

CHECK DAM F6
OUTLET CONFIGURATION
1:100

NO.	DATE	REVISIONS	BY	CHK	LEAD. DISC.	PROJ. MAN.
C	19/01/25	50% SUBMISSION TO CA				

SCALE :

CONSULTANT	NAME (PRINT)	INIT.	DATE
DESIGNED	JUAN LOPEZ	J.L.	
DRAWN	JAMIE HUANG	J.H.	
CHECKED	JUAN LOPEZ	J.L.	
APPROVED LEAD ENGINEER	JUAN LOPEZ	J.L.	
APPROVED PROJ. MANAGER	PETER BAMFORTH	P.B.	

Ontario

link427
LOCAL | INTEGRATED | NEIGHBOURLY | KNOWLEDGEABLE

TITLE
HWY 427 EXPANSION
STORMWATER MANAGEMENT
DETAILS PACKAGE 7

PROJECT ID.	STAGE INDENTIFIER	DESIGN PACKAGE NUMBER	DISCIPLINE	STRUCTURE NUMBER	DOCUMENT TYPE	DRAWING NUMBER	REVISION NUMBER
H427-D	F	7	WAT	000	DWG	2217	C

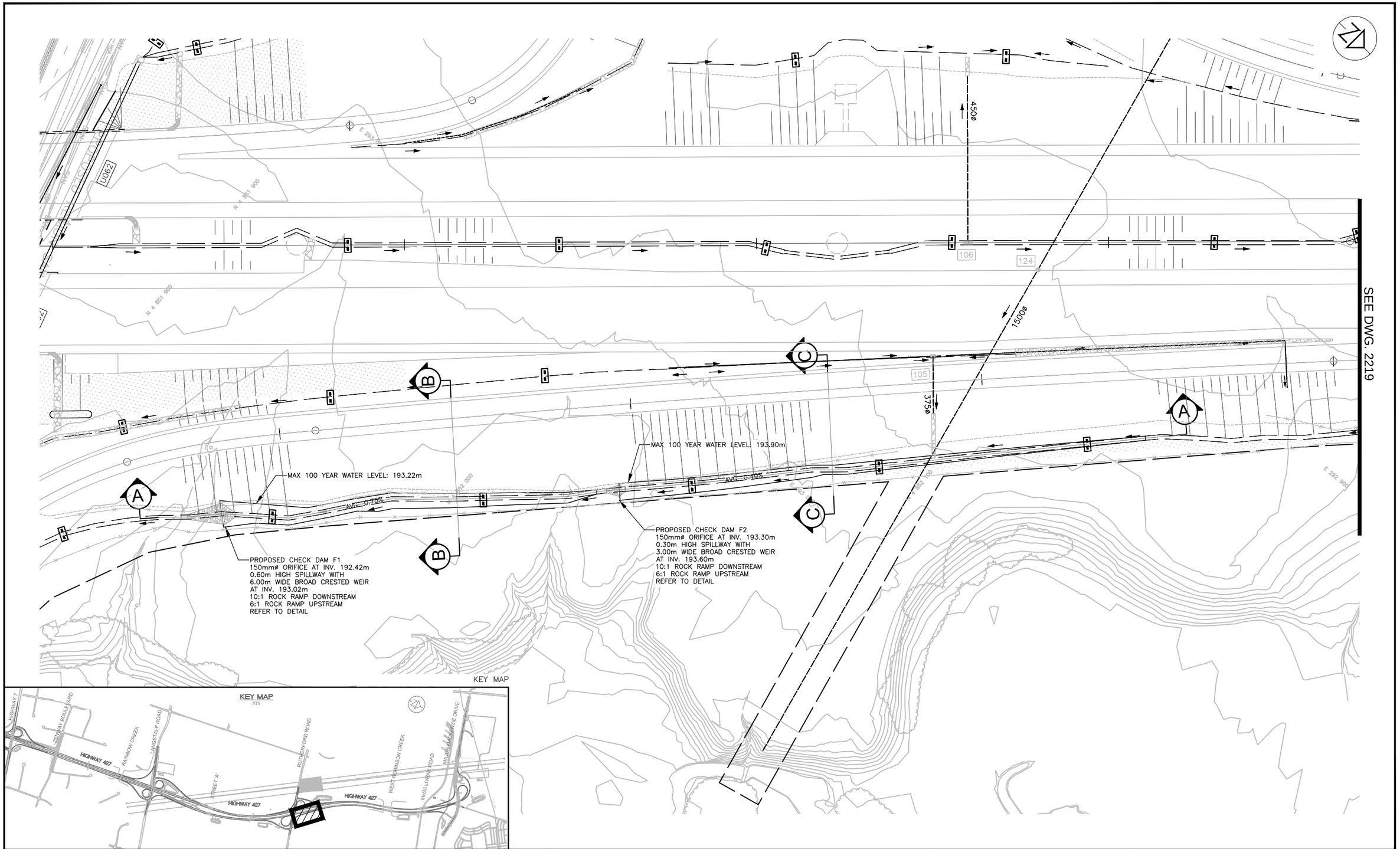

NO.	DATE	REVISIONS	BY	CHK	LEAD. DISC.	PROJ. MAN.
C	19/01/25	50% SUBMISSION TO CA				

SCALE :

5m 0 10m

Metres HORIZONTAL

CONSULTANT

	NAME (PRINT)	INIT.	DATE
DESIGNED	JUAN LOPEZ		
DRAWN	JAMIE HUANG		
CHECKED	JUAN LOPEZ		
APPROVED LEAD ENGINEER	JUAN LOPEZ		
APPROVED PROJ. MANAGER	PETER BAMFORTH		

Ontario

link427

LOCAL | INTEGRATED | NEIGHBOURLY | KNOWLEDGEABLE

TITLE

HWY 427 EXPANSION
ENHANCED GRASS SWALE F
CHECK DAM F1 AND F2

PROJECT ID.	STAGE INDENTIFIER	DESIGN PACKAGE NUMBER	DISCIPLINE	STRUCTURE NUMBER	DOCUMENT TYPE	DRAWING NUMBER	REVISION NUMBER
H427–D	F	7	WAT	000	DWG	2218	C

NO.	DATE	REVISIONS	BY	CHK	LEAD. DISC.	PROJ. MAN.
C	19/01/25	50% SUBMISSION TO CA				

SCALE :

5m 0 10m

Metres HORIZONTAL

CONSULTANT			
DESIGNED	JUAN LOPEZ		
DRAWN	JAMIE HUANG		
CHECKED	JUAN LOPEZ		
APPROVED LEAD ENGINEER	JUAN LOPEZ		
APPROVED PROJ. MANAGER	PETER BAMFORTH		
	NAME (PRINT)	INIT.	DATE

Ontario

link427
LOCAL | INTEGRATED | NEIGHBOURLY | KNOWLEDGEABLE

TITLE

HWY 427 EXPANSION
ENHANCED GRASS SWALE F
CHECK DAM F6

PROJECT ID.	STAGE INDENTIFIER	DESIGN PACKAGE NUMBER	DISCIPLINE	STRUCTURE NUMBER	DOCUMENT TYPE	DRAWING NUMBER	REVISION NUMBER
H427–D	F	7	WAT	000	DWG	2219	C

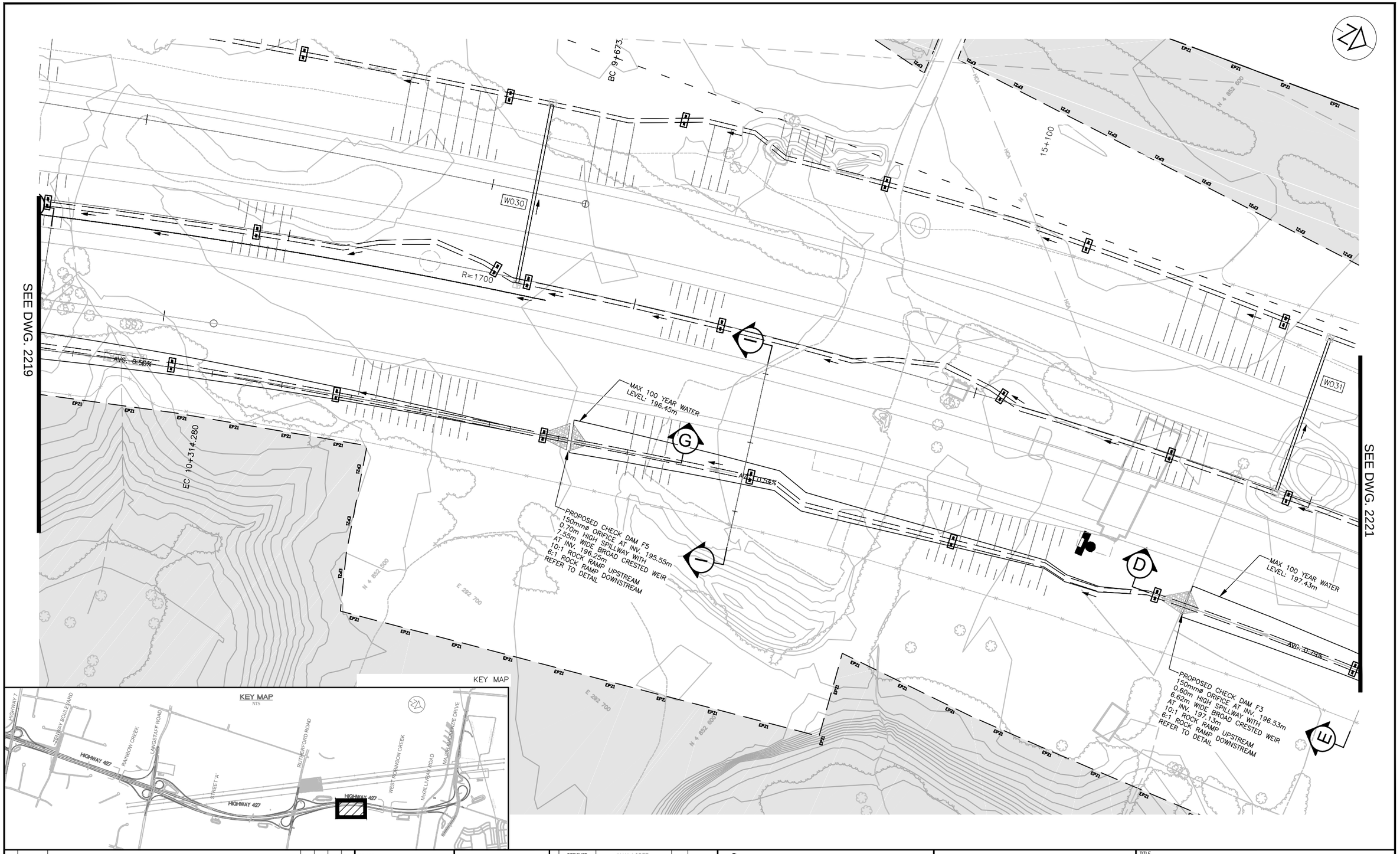

NO.	DATE	REVISIONS	BY	CHK	LEAD. DISC.	PROJ. MAN.
C	19/01/25	50% SUBMISSION TO CA				

SCALE :

5m 0 10m

Metres
HORIZONTAL

CONSULTANT

	NAME (PRINT)	INIT.	DATE
DESIGNED	JUAN LOPEZ		
DRAWN	JAMIE HUANG		
CHECKED	JUAN LOPEZ		
APPROVED LEAD ENGINEER	JUAN LOPEZ		
APPROVED PROJ. MANAGER	PETER BAMFORTH		

Ontario

link427
LOCAL | INTEGRATED | NEIGHBOURLY | KNOWLEDGEABLE

TITLE

HWY 427 EXPANSION
ENHANCED GRASS SWALE F
CHECK DAM F5 AND F3

PROJECT ID.	STAGE INDENTIFIER	DESIGN PACKAGE NUMBER	DISCIPLINE	STRUCTURE NUMBER	DOCUMENT TYPE	DRAWING NUMBER	REVISION NUMBER
H427–D	F	7	WAT	000	DWG	2220	C

NO.	DATE	REVISIONS	BY	CHK	LEAD. DISC.	PROJ. MAN.
C	19/01/25	50% SUBMISSION TO CA				

SCALE :

5m 0 10m

Metres HORIZONTAL

CONSULTANT

	NAME (PRINT)	INIT.	DATE
DESIGNED	JUAN LOPEZ		
DRAWN	JAMIE HUANG		
CHECKED	JUAN LOPEZ		
APPROVED LEAD ENGINEER	JUAN LOPEZ		
APPROVED PROJ. MANAGER	PETER BAMFORTH		

Ontario

link427

LOCAL | INTEGRATED | NEIGHBOURLY | KNOWLEDGEABLE

TITLE

HWY 427 EXPANSION

ENHANCED GRASS SWALE F CHECK DAM F3 AND F4

PROJECT ID.	STAGE INDENTIFIER	DESIGN PACKAGE NUMBER	DISCIPLINE	STRUCTURE NUMBER	DOCUMENT TYPE	DRAWING NUMBER	REVISION NUMBER
H427–D	F	7	WAT	000	DWG	2221	C

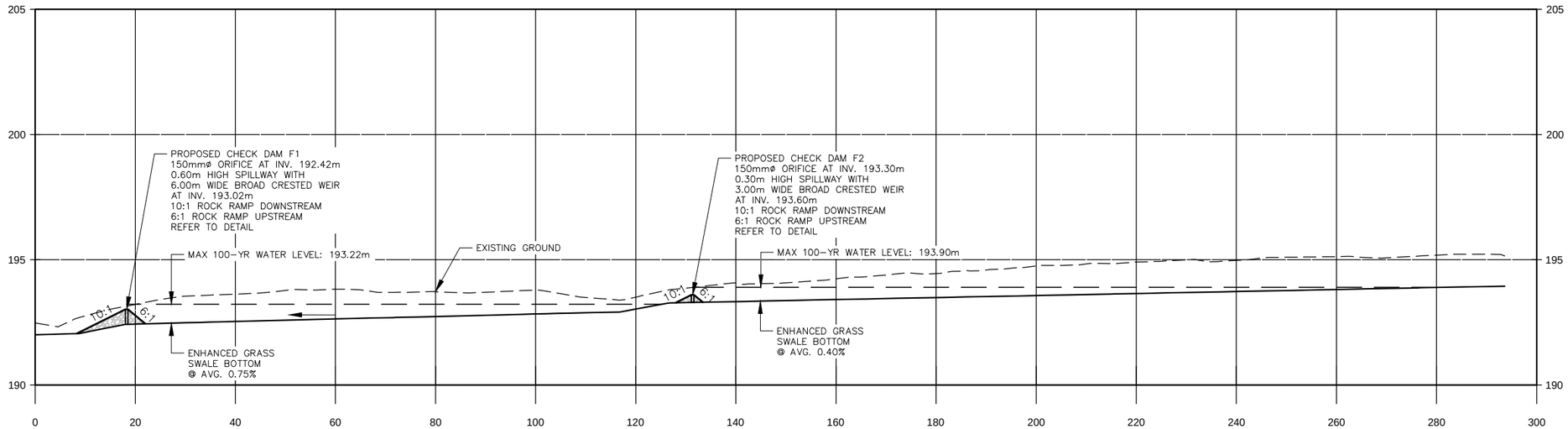

Enhanced Grass Swale F A-A

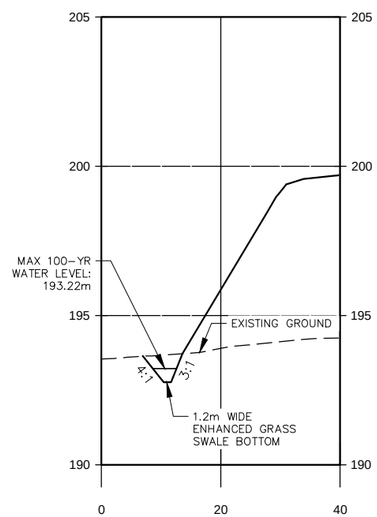

Enhanced Grass Swale F B-B

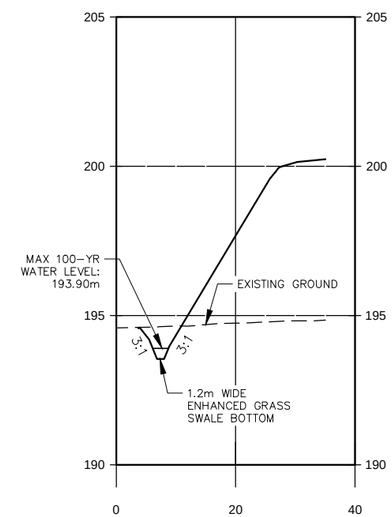

Enhanced Grass Swale F C-C

NO.	DATE	REVISIONS	BY	CHK	LEAD. DISC.	PROJ. MAN.
C	19/01/25	50% SUBMISSION TO CA				

SCALE :

1m 0 2m
Metres
VERTICAL

5m 0 10m
Metres
HORIZONTAL

CONSULTANT			
DESIGNED	JUAN LOPEZ		
DRAWN	JAMIE HUANG-HADI ABBASI		
CHECKED	JUAN LOPEZ		
APPROVED LEAD ENGINEER	JUAN LOPEZ		
APPROVED PROJ. MANAGER	PETER BAMFORTH		
	NAME (PRINT)	INIT.	DATE

Ontario

link427
LOCAL | INTEGRATED | NEIGHBOURLY | KNOWLEDGEABLE

TITLE

HWY 427 EXPANSION
ENHANCED GRASS SWALE SECTION
CHECK DAM F1 AND F2

PROJECT ID.	STAGE INDENTIFIER	DESIGN PACKAGE NUMBER	DISCIPLINE	STRUCTURE NUMBER	DOCUMENT TYPE	DRAWING NUMBER	REVISION NUMBER
H427-D	F	7	WAT	000	DWG	2222	C

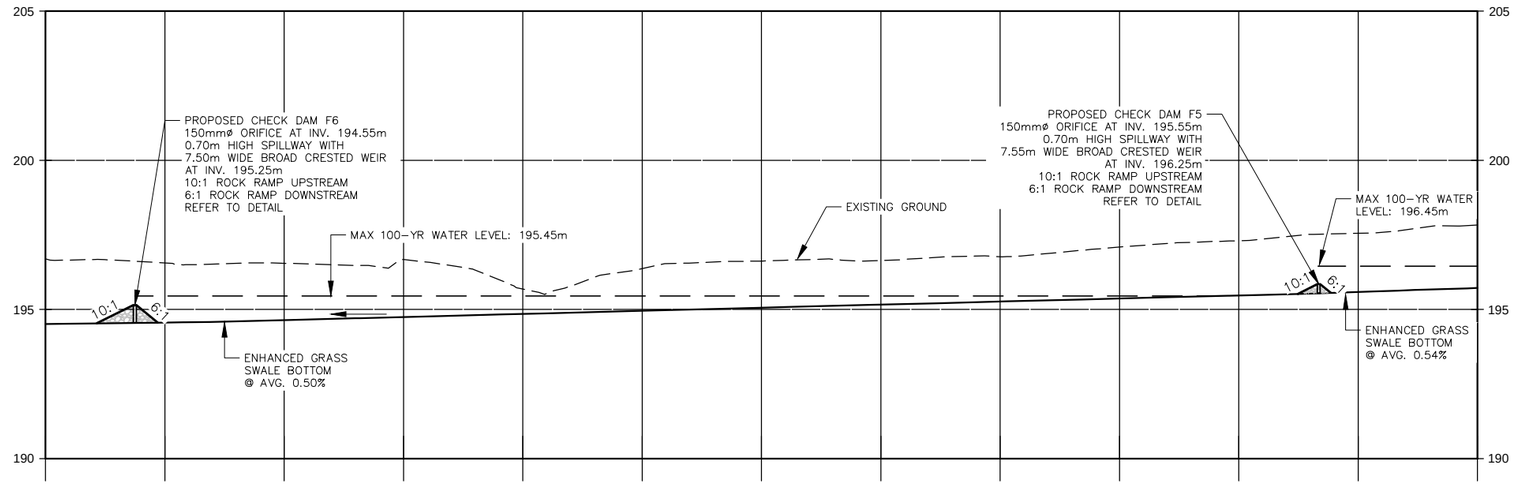

Enhanced Grass Swale F G-G

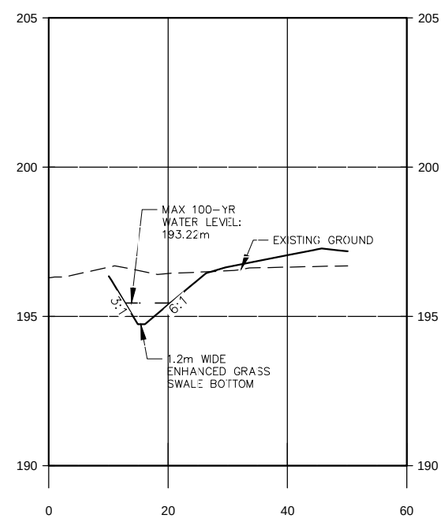

Enhanced Grass Swale F H-H

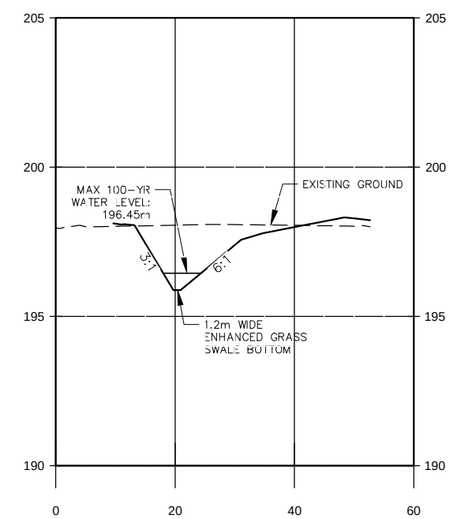

Enhanced Grass Swale F I-I

NO.	DATE	REVISIONS	BY	CHK	LEAD. DISC.	PROJ. MAN.
C	19/01/25	50% SUBMISSION TO CA				

SCALE :

1m 0 2m
Metres
VERTICAL

5m 0 10m
Metres
HORIZONTAL

CONSULTANT

	NAME (PRINT)	INIT.	DATE
DESIGNED	JUAN LOPEZ		
DRAWN	JAMIE HUANG-HADI ABBASI		
CHECKED	JUAN LOPEZ		
APPROVED LEAD ENGINEER	JUAN LOPEZ		
APPROVED PROJ. MANAGER	PETER BAMFORTH		

Ontario

link427
LOCAL | INTEGRATED | NEIGHBOURLY | KNOWLEDGEABLE

TITLE

HWY 427 EXPANSION
ENHANCED GRASS SWALE SECTION
CHECK DAM F5 AND F6

PROJECT ID.	STAGE INDENTIFIER	DESIGN PACKAGE NUMBER	DISCIPLINE	STRUCTURE NUMBER	DOCUMENT TYPE	DRAWING NUMBER	REVISION NUMBER
H427-D	F	7	WAT	000	DWG	2223	C

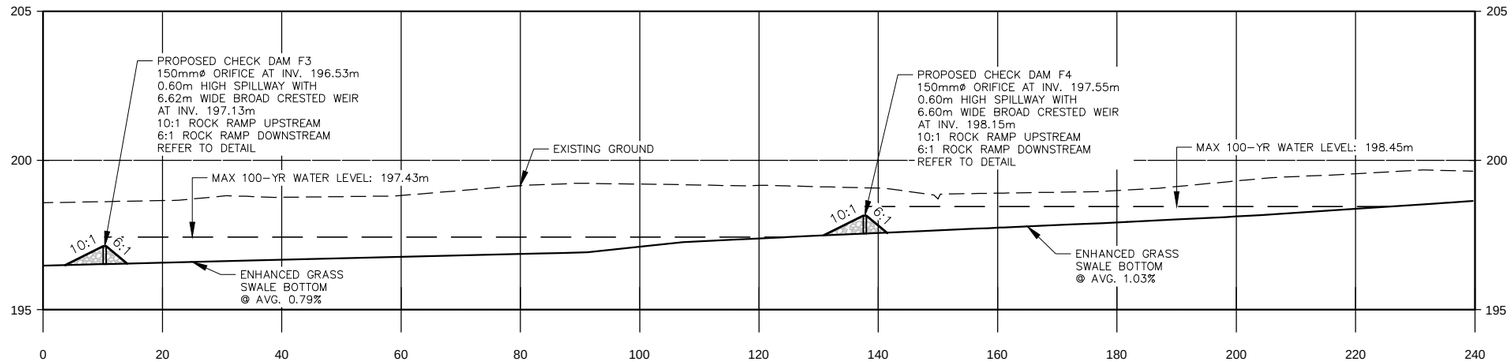

Enhanced Grass Swale F D-D

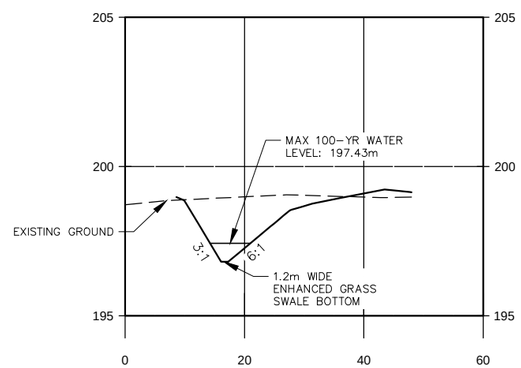

Enhanced Grass Swale F E-E

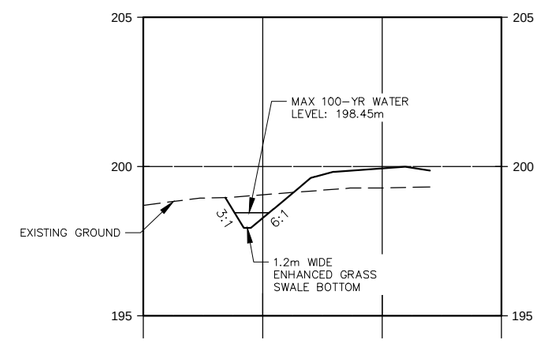

Enhanced Grass Swale F F-F

NO.	DATE	REVISIONS	BY	CHK	LEAD. DISC.	PROJ. MAN.
C	19/01/25	50% SUBMISSION TO CA				

SCALE :

1m 0 2m
Metres
VERTICAL

5m 0 10m
Metres
HORIZONTAL

CONSULTANT

	NAME (PRINT)	INIT.	DATE
DESIGNED	JUAN LOPEZ		
DRAWN	JAMIE HUANG-HADI ABBASI		
CHECKED	JUAN LOPEZ		
APPROVED LEAD ENGINEER	JUAN LOPEZ		
APPROVED PROJ. MANAGER	PETER BAMFORTH		

Ontario

link427
LOCAL | INTEGRATED | NEIGHBOURLY | KNOWLEDGEABLE

TITLE

HWY 427 EXPANSION
ENHANCED GRASS SWALE SECTION
CHECK DAM F3 AND F4

PROJECT ID.	STAGE INDENTIFIER	DESIGN PACKAGE NUMBER	DISCIPLINE	STRUCTURE NUMBER	DOCUMENT TYPE	DRAWING NUMBER	REVISION NUMBER
H427-D	F	7	WAT	000	DWG	2224	C

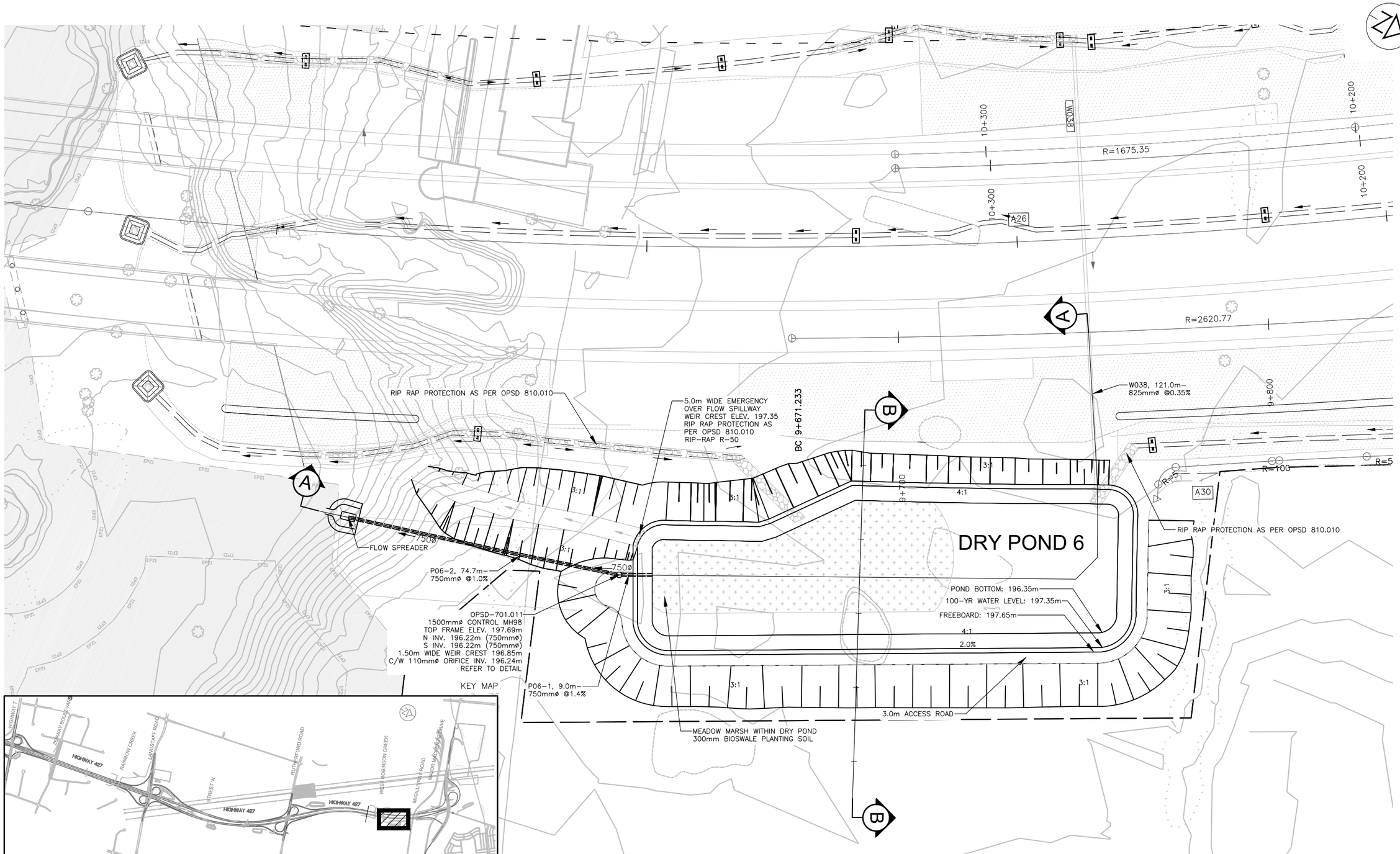

NO.	DATE	REVISIONS	BY	CHK	LEAD. DISC.	PROJ. MAN.
A	19/01/25	90% SUBMISSION TO CA				

SCALE :

5m 0 10m
Metres
HORIZONTAL

CONSULTANT

	NAME (PRINT)	INIT.	DATE
DESIGNED	JUAN LOPEZ		
DRAWN	HADI ABBASI-JAMIE HUANG		
CHECKED	JUAN LOPEZ		
APPROVED LEAD ENGINEER	JUAN LOPEZ		
APPROVED PROJ. MANAGER	PETER BAMFORTH		

Ontario

link427
LOCAL | INTEGRATED | NEIGHBOURLY | KNOWLEDGEABLE

TITLE

HWY 427 EXPANSION
DRY POND 6
STATION 15+800

PROJECT ID.	STAGE INDENTIFIER	DESIGN PACKAGE NUMBER	DISCIPLINE	STRUCTURE NUMBER	DOCUMENT TYPE	DRAWING NUMBER	REVISION NUMBER
H427-D	N	8	WAT	000	DWG	2200	A

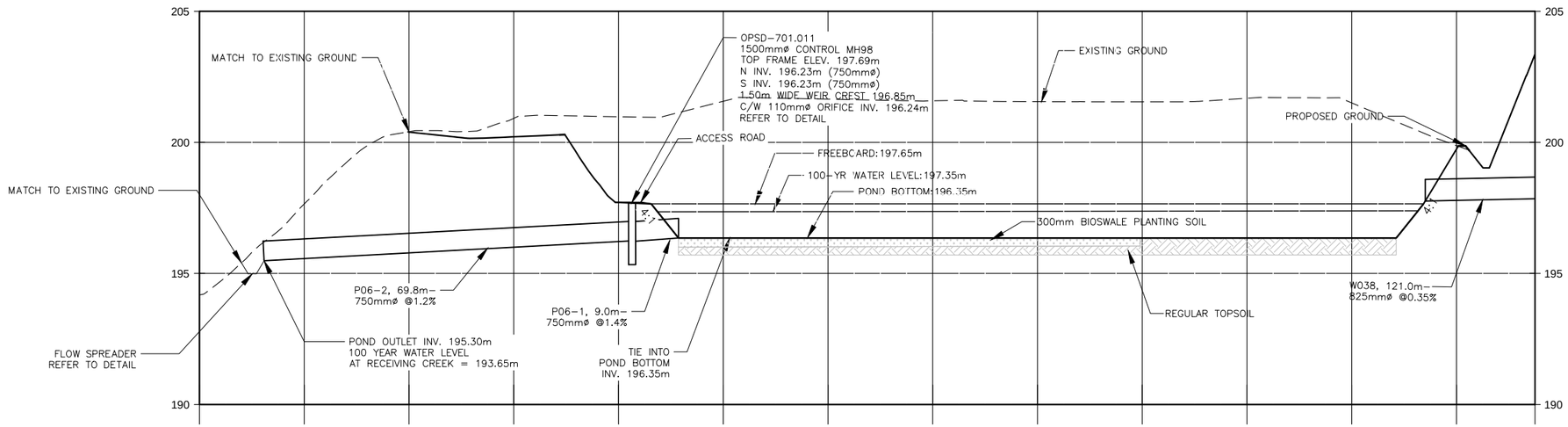

Pond 6 A–A

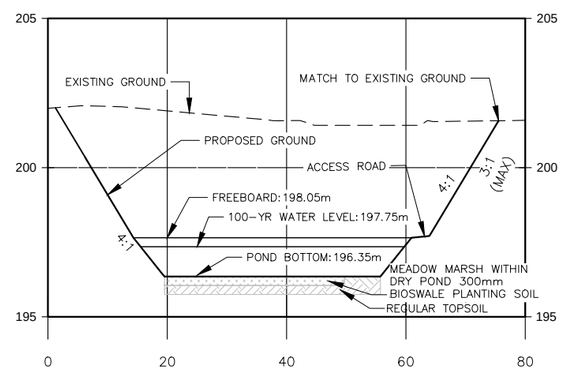

Pond 6 B–B

NO.	DATE	REVISIONS	BY	CHK	LEAD. DISC.	PROJ. MAN.
A	19/01/25	90% SUBMISSION TO CA				

SCALE :

1m 0 2m
Metres VERTICAL

5m 0 10m
Metres HORIZONTAL

CONSULTANT

	NAME (PRINT)	INIT.	DATE
DESIGNED	JUAN LOPEZ		
DRAWN	HADI ABBASI-JAMIE HUANG		
CHECKED	JUAN LOPEZ		
APPROVED LEAD ENGINEER	JUAN LOPEZ		
APPROVED PROJ. MANAGER	PETER BAMFORTH		

Ontario

link427
LOCAL | INTEGRATED | NEIGHBOURLY | KNOWLEDGEABLE

TITLE

HWY 427 EXPANSION
POND SECTION
DRY POND 6
STATION 15+800

PROJECT ID.	STAGE INDENTIFIER	DESIGN PACKAGE NUMBER	DISCIPLINE	STRUCTURE NUMBER	DOCUMENT TYPE	DRAWING NUMBER	REVISION NUMBER
H427-D	N	8	WAT	000	DWG	2201	A

POE 16+638.008

R=30

10+100

R=30

R=20

10+200

RIP RAP PROTECTION AS PER OPSD 810.010

W047, 21.46m –
825mmø @1.9%

FREEBOARD: 202.55m

100–YR WATER LEVEL: 202.25m

POND BOTTOM: 200.85m

5.0m WIDE EMERGENCY
OVER FLOW SPILLWAY
WEIR CREST ELEV. 202.50
RIP RAP PROTECTION AS
PER OPSD 810.010
RIP–RAP R–10

RIP RAP PROTECTION AS PER OPSD 810.010

P07–2, 24.1m –
675mmø @0.2%

OPSD–701.011
1500mmø CONTROL MH 78
TOP FRAME ELEV. 202.55m
S INV. 200.83m (675mmø)
N INV. 200.83m (675mmø)
N INV. 199.80m (200mmø)
1.50m WIDE WEIR CREST 201.22m
C/W 80mmø ORIFICE INV. 200.83m
200mmø BACKWATER VALVE INV. 199.8m
REFER TO DETAIL

P07–1, 9.0m –
675mmø @0.2%

675ø

675ø

3:1

3:1

3:1

3:1

3:1

3:1

2.0%

4:1

4:1

2.0%

DRY POND 7

MEADOW MARSH WITHIN DRY POND
300mm BIOSWALE PLANTING SOIL

3.0m ACCESS ROAD

A

B

A

B

TCPL

TCPL KNC NPS 36" w/60m ZONE

KEY MAP

KEY MAP
NTS

HIGHWAY 7
ZENWAY BOULEVARD
HIGHWAY 427
RAINBOW CREEK
LANGSTAFF ROAD
STREET 'A'
RUTHERFORD ROAD
HIGHWAY 427
HIGHWAY 427
WEST ROBINSON CREEK
McGILLIVRAY ROAD
MAJOR MACKENZIE DRIVE

NO.	DATE	REVISIONS	BY	CHK	LEAD. DISC.	PROJ. MAN.
A	19/01/25	90% SUBMISSION TO CA				

SCALE :

5m 0 10m
Metres
HORIZONTAL

CONSULTANT

	NAME (PRINT)	INIT.	DATE
DESIGNED	JUAN LOPEZ		
DRAWN	HADI ABBASI–JAMIE HUANG		
CHECKED	JUAN LOPEZ		
APPROVED LEAD ENGINEER	JUAN LOPEZ		
APPROVED PROJ. MANAGER	PETER BAMFORTH		

Ontario

link427
LOCAL | INTEGRATED | NEIGHBOURLY | KNOWLEDGEABLE

TITLE

HWY 427 EXPANSION
DRY POND 7
STATION 16+600

PROJECT ID.	STAGE INDENTIFIER	DESIGN PACKAGE NUMBER	DISCIPLINE	STRUCTURE NUMBER	DOCUMENT TYPE	DRAWING NUMBER	REVISION NUMBER
H427–D	N	8	WAT	000	DWG	2202	A

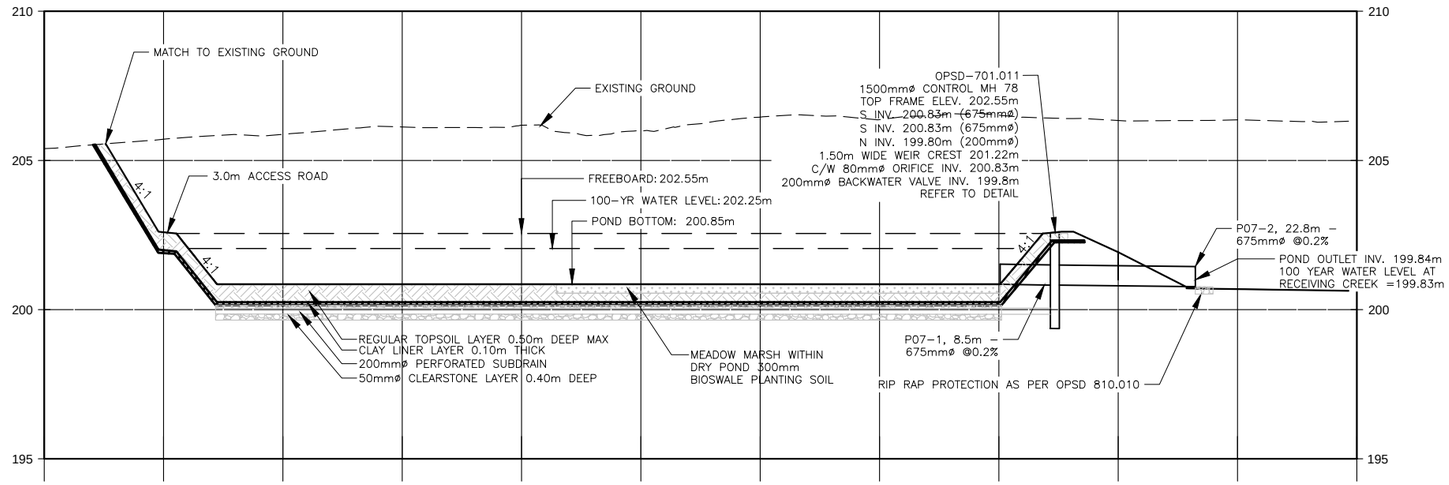

Pond 7 A–A

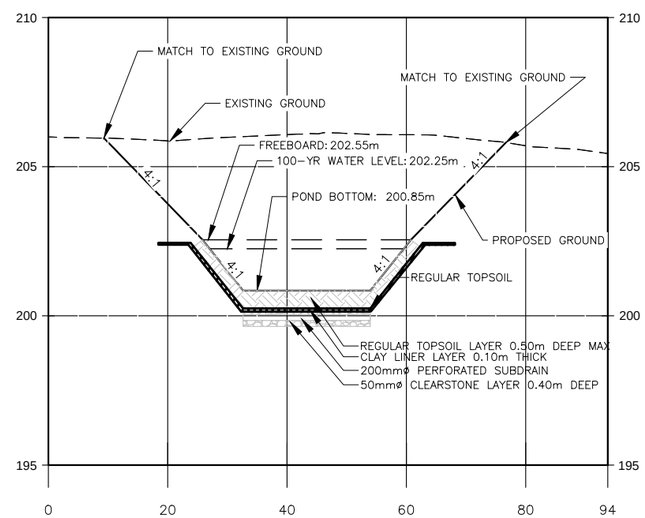

Pond 7 B–B

NO.	DATE	REVISIONS	BY	CHK	LEAD. DISC.	PROJ. MAN.
A	19/01/25	90% SUBMISSION TO CA				

SCALE :

1m 0 2m
Metres VERTICAL

5m 0 10m
Metres HORIZONTAL

CONSULTANT

	NAME (PRINT)	INIT.	DATE
DESIGNED	JUAN LOPEZ		
DRAWN	HADI ABBASI-JAMIE HUANG		
CHECKED	JUAN LOPEZ		
APPROVED LEAD ENGINEER	JUAN LOPEZ		
APPROVED PROJ. MANAGER	PETER BAMFORTH		

Ontario

link427
LOCAL | INTEGRATED | NEIGHBOURLY | KNOWLEDGEABLE

TITLE

HWY 427 EXPANSION
POND SECTION
DRY POND 7
STATION 16+600

PROJECT ID.	STAGE INDENTIFIER	DESIGN PACKAGE NUMBER	DISCIPLINE	STRUCTURE NUMBER	DOCUMENT TYPE	DRAWING NUMBER	REVISION NUMBER
H427-D	N	8	WAT	000	DWG	2203	A

OPSD-701.012
1500mmø CONTROL MH
TOP FRAME ELEV. 201.48m
E. INV. 199.92m (825mmø)
W. INV. 199.92m (200mmø)
E. INV. 198.98m (200mmø)
1.50m WIDE WEIR CREST 200.50m
C/W 90mmø ORIFICE INV. 199.92m
200mmø BACKWATER VALVE INV. 198.98m
REFER TO DETAIL

A58

RIP RAP PROTECTION AS PER OPSD 810.010

RIP RAP PROTECTION AS PER OPSD 810.010

825ø

R=22.5

P08-2, 31.3m –
825mmø @0.3%

P08-1, 6.8m –
825mmø @0.3%

W013

5.0m ACCESS ROAD

MEADOW MARSH WITHIN DRY POND
300mm BIOSWALE PLANTING SOIL

RIP RAP PROTECTION AS PER OPSD 810.010

450ø

525ø

2.0%

FLOW DIVERSION BERM
TOP ELEV. 200.60m

A59, 11.0m–
525mmø @0.30%

DRY POND 8

9+600

9+700

17+000

A-190

R=420

POND BOTTOM: 199.94m

100-YR WATER LEVEL: 200.60m

FREEBOARD: 201.44m

EDGE OF ACCESS ROAD: 201.50m

U107

U108

RIP RAP PROTECTION AS PER OPSD 810.010

RIP RAP PROTECTION AS PER OPSD 810.010

4:1

2.0%

3.0m ACCESS ROAD

U106, 10.8m–
525mmø @0.52%

U107, 10.6m–
525mmø @0.37%

R=12

10+100

RIP RAP PROTECTION AS PER OPSD 810.010

KEY MAP

KEY MAP
NTS

HIGHWAY 7
ZENWAY BOULEVARD
HIGHWAY 427
RAINBOW CREEK
LANGSTAFF ROAD
STREET 'A'
RUTHERFORD ROAD
HIGHWAY 427
HIGHWAY 427
WEST ROBINSON CREEK
McGILLIVRAY ROAD
MANDI MACKENZIE DRIVE

NO.	DATE	REVISIONS	BY	CHK	LEAD. DISC.	PROJ. MAN.
A	19/01/25	90% SUBMISSION TO CA				

SCALE :

5m 0 10m
Metres
HORIZONTAL

CONSULTANT

	NAME (PRINT)	INIT.	DATE
DESIGNED	JUAN LOPEZ		
DRAWN	HADI ABBASI-JAMIE HUANG		
CHECKED	JUAN LOPEZ		
APPROVED LEAD ENGINEER	JUAN LOPEZ		
APPROVED PROJ. MANAGER	PETER BAMFORTH		

Ontario

link427
LOCAL | INTEGRATED | NEIGHBOURLY | KNOWLEDGEABLE

TITLE

HWY 427 EXPANSION
DRY POND 8
STATION 9+700

PROJECT ID.	STAGE IDENTIFIER	DESIGN PACKAGE NUMBER	DISCIPLINE	STRUCTURE NUMBER	DOCUMENT TYPE	DRAWING NUMBER	REVISION NUMBER
H427-D	N	8	WAT	000	DWG	2204	A

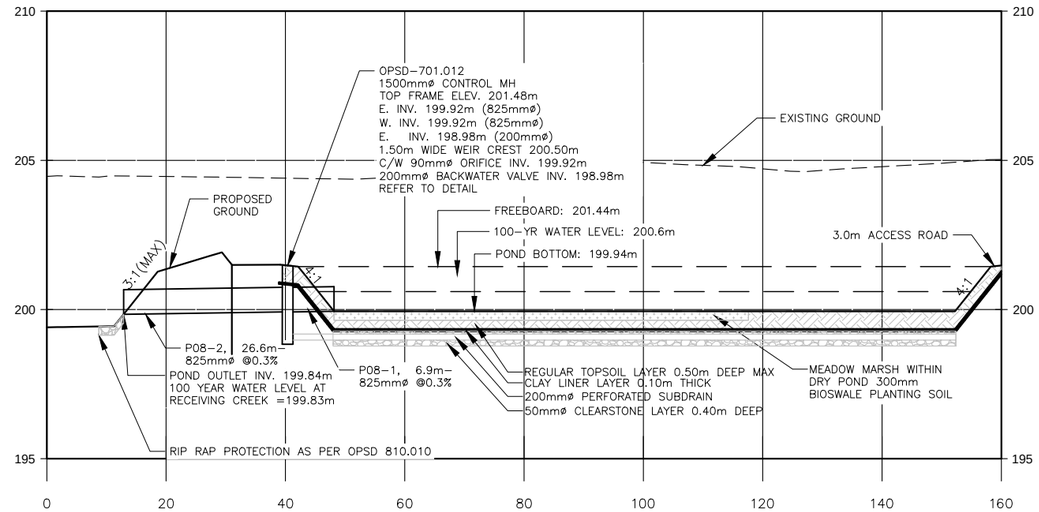

Pond 8 A–A

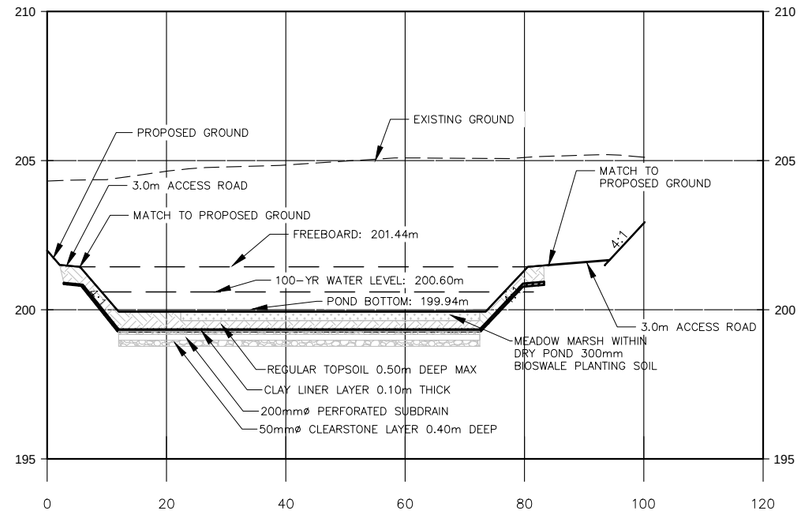

Pond 8 B–B

NO.	DATE	REVISIONS	BY	CHK	LEAD. DISC.	PROJ. MAN.
A	19/01/25	90% SUBMISSION TO CA				

SCALE :

1m 0 2m
Metres VERTICAL

5m 0 10m
Metres HORIZONTAL

CONSULTANT

	NAME (PRINT)	INIT.	DATE
DESIGNED	JUAN LOPEZ		
DRAWN	HADI ABBASI–JAMIE HUANG		
CHECKED	JUAN LOPEZ		
APPROVED LEAD ENGINEER	JUAN LOPEZ		
APPROVED PROJ. MANAGER	PETER BAMFORTH		

Ontario

link427
LOCAL | INTEGRATED | NEIGHBOURLY | KNOWLEDGEABLE

TITLE

HWY 427 EXPANSION
POND SECTION
DRY POND 8
STATION 9+700

PROJECT ID.	STAGE INDENTIFIER	DESIGN PACKAGE NUMBER	DISCIPLINE	STRUCTURE NUMBER	DOCUMENT TYPE	DRAWING NUMBER	REVISION NUMBER
H427–D	N	8	WAT	000	DWG	2205	A

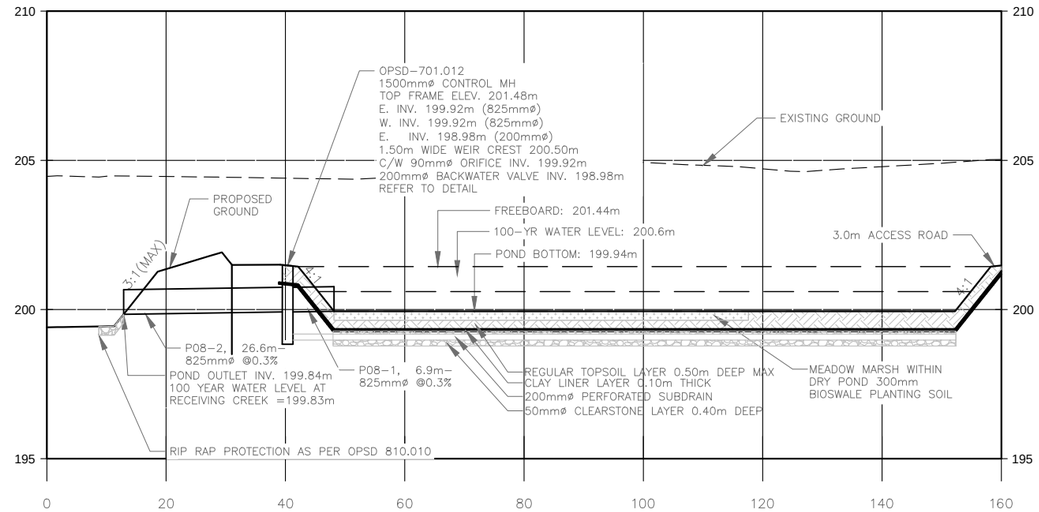

Pond 8 A–A

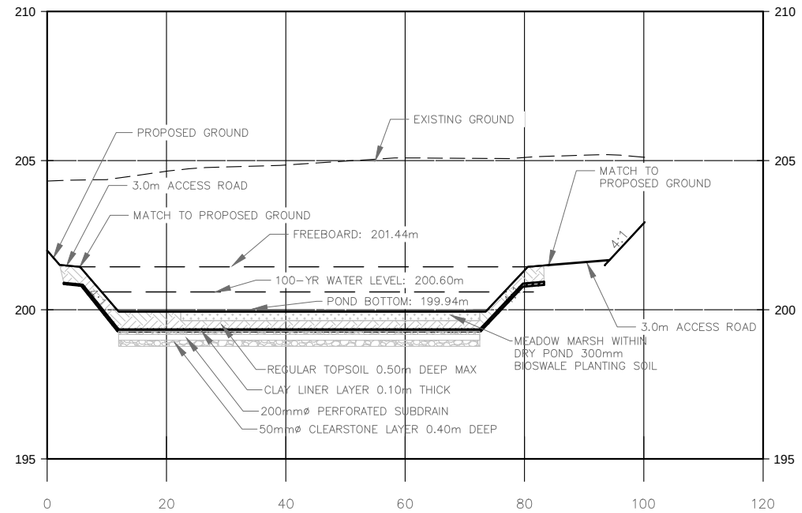

Pond 8 B–B

NO.	DATE	REVISIONS	BY	CHK	LEAD. DISC.	PROJ. MAN.
A	19/01/25	90% SUBMISSION TO CA				

SCALE :

1m 0 2m
Metres VERTICAL

5m 0 10m
Metres HORIZONTAL

CONSULTANT

	NAME (PRINT)	INIT.	DATE
DESIGNED	JUAN LOPEZ		
DRAWN	HADI ABBASI–JAMIE HUANG		
CHECKED	JUAN LOPEZ		
APPROVED LEAD ENGINEER	JUAN LOPEZ		
APPROVED PROJ. MANAGER	PETER BAMFORTH		

Ontario

link427
LOCAL | INTEGRATED | NEIGHBOURLY | KNOWLEDGEABLE

TITLE

HWY 427 EXPANSION
POND SECTION
DRY POND 8
STATION 9+700

PROJECT ID.	STAGE INDENTIFIER	DESIGN PACKAGE NUMBER	DISCIPLINE	STRUCTURE NUMBER	DOCUMENT TYPE	DRAWING NUMBER	REVISION NUMBER
H427–D	N	8	WAT	000	DWG	2205	A

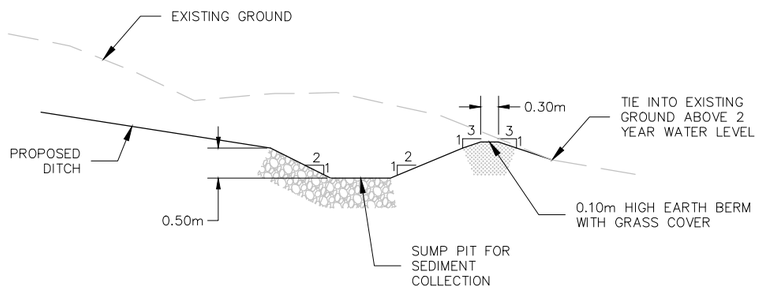

NOTES:

1. WIDTH AND LENGTH OF SUMP PIT BOTTOM TO BE PIPE DIAMETER + 1.2m OR EQUIVALENT TO THE INCOMING FLAT BOTTOM DITCH WIDTH.

TYPICAL FLOW SPREADER PROFILE DETAIL

1:100

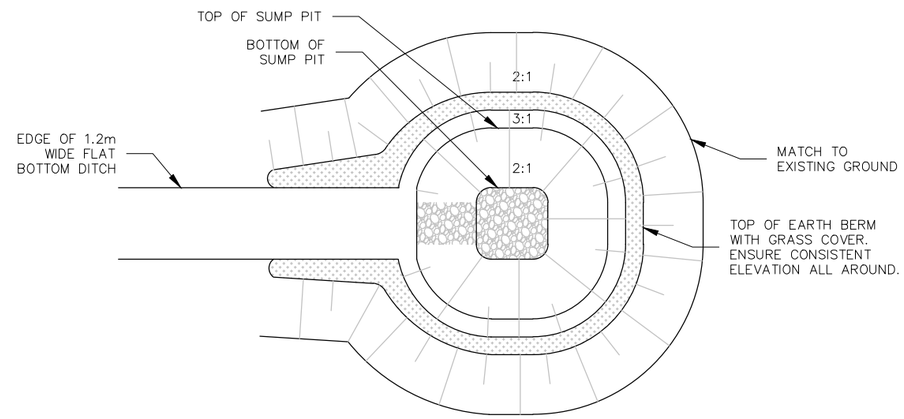

TYPICAL FLOW SPREADER PLAN DETAIL

1:100

NO.	DATE	REVISIONS	BY	CHK	LEAD. DISC.	PROJ. MAN.
A	19/01/25	90% SUBMISSION TO CA				

SCALE :

0.5m 0 1m

Metres HORIZONTAL

CONSULTANT

	NAME (PRINT)	INIT.	DATE
DESIGNED	JUAN LOPEZ	J.L.	
DRAWN	JAMIE HUANG	J.H.	
CHECKED	JUAN LOPEZ	J.L.	
APPROVED LEAD ENGINEER	JUAN LOPEZ	J.L.	
APPROVED PROJ. MANAGER	PETER BAMFORTH	P.B.	

Ontario

link427

LOCAL | INTEGRATED | NEIGHBOURLY | KNOWLEDGEABLE

TITLE

HWY 427 EXPANSION
STORMWATER MANAGEMENT
DETAILS

PROJECT ID.	STAGE INDENTIFIER	DESIGN PACKAGE NUMBER	DISCIPLINE	STRUCTURE NUMBER	DOCUMENT TYPE	DRAWING NUMBER	REVISION NUMBER
H427–D	N	8	WAT	000	DWG	2206	A

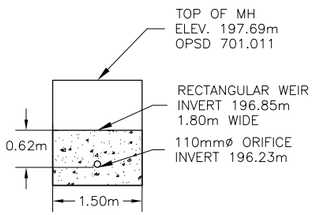

POND 6 INTERNAL MAINTENANCE HOLE
OUTLET CONFIGURATION
1:100

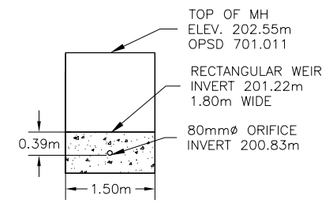

POND 7 INTERNAL MAINTENANCE HOLE
OUTLET CONFIGURATION
1:100

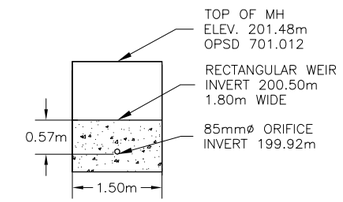

POND 8 INTERNAL MAINTENANCE HOLE
OUTLET CONFIGURATION
1:100

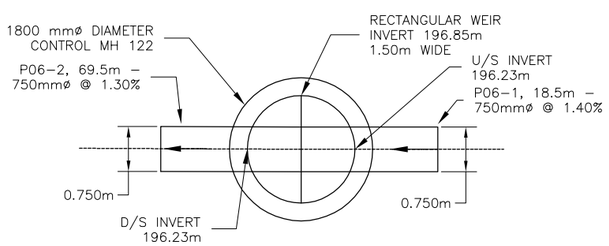

POND 6 INTERNAL MAINTENANCE HOLE
BENCHING DETAILS
1:100

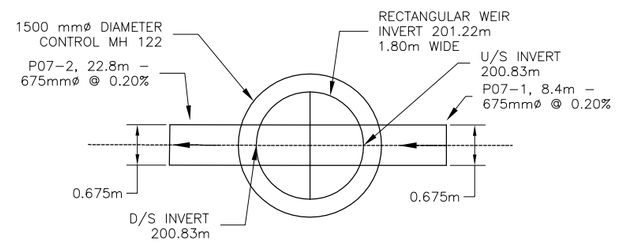

POND 7 INTERNAL MAINTENANCE HOLE
BENCHING DETAILS
1:100

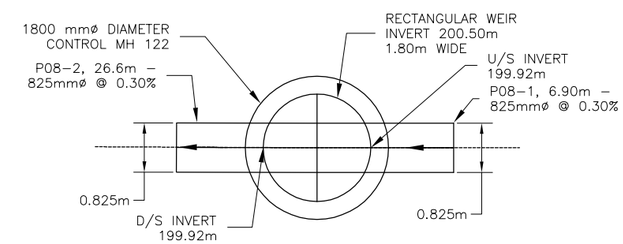

POND 8 INTERNAL MAINTENANCE HOLE
BENCHING DETAILS
1:100

NO.	DATE	REVISIONS	BY	CHK	LEAD. DISC.	PROJ. MAN.
A	19/01/25	90% SUBMISSION TO CA				

SCALE :

CONSULTANT

	NAME (PRINT)	INIT.	DATE
DESIGNED	JUAN LOPEZ	J.L.	
DRAWN	JAMIE HUANG	J.H.	
CHECKED	JUAN LOPEZ	J.L.	
APPROVED LEAD ENGINEER	JUAN LOPEZ	J.L.	
APPROVED PROJ. MANAGER	PETER BAMFORTH	P.B.	

Ontario

link427
LOCAL | INTEGRATED | NEIGHBOURLY | KNOWLEDGEABLE

TITLE
HWY 427 EXPANSION
STORMWATER MANAGEMENT
DETAILS PACKAGE 8

PROJECT ID.	STAGE INDENTIFIER	DESIGN PACKAGE NUMBER	DISCIPLINE	STRUCTURE NUMBER	DOCUMENT TYPE	DRAWING NUMBER	REVISION NUMBER
H427–D	N	8	WAT	000	DWG	2207	A

SWM FACILITY TABLE

	SWM POND PROPERTIES								SWM POND INLET FACILITY							SWM POND OUTLET FACILITY							
DESIGN SEGMENT	POND ID	STATION	BOTTOM ELEVATION (m)	PERMANENT POOL (m)	100 YR WATER LEVEL	FREEBOARD (m)	2 YEAR WATER LEVEL (m)	100 YEAR WATER LEVEL (m)	ID	TYPE	DIAMETER (mm)	UPSTREAM INVERT(m)	LENGTH (m)	SLOPE	DOWNSTREAM INVERT (m)	ID	TYPE / SPECIFICATION(1)	DIAMETER (mm)	UPSTREAM INVERT(m)	LENGTH (m)	SLOPE	DOWNSTREAM INVERT (m)	NOTES: OUTLET CONFIGURATION
L-5	6	15+800	196.35	N/A	197.35	197.65	193.18	193.65	W045	SEE CULVERT DESIGN TABLE						P06-1	65-D	750	196.35	8.3	1.4%	196.23	
																CONTROL MH	701.011	1500	-	-	-	-	110mm ORIFICE INV. 196.24m 1.50m WIDE WEIR CREST ELEV. 196.85m
									W038	SEE CULVERT DESIGN TABLE						P06-2	100-D	750	196.23	74.7	1.2%	195.30	
	7	16+600	200.85	N/A	202.25	202.55	198.74	199.83	W043	SEE CULVERT DESIGN TABLE						P07-1	65-D	675	200.85	8.4	0.2%	200.83	
																CONTROL MH	701.011	1500	-	-	-	-	80mm ORIFICE INV. 200.83m 1.50m WIDE WEIR CREST ELEV. 201.22m 200mm BACKWATER VALVE INV, 199.80m
																P07-2	65-D	675	200.83	22.8	0.2%	200.78	
	8	9+700	199.94	N/A	200.6	201.44	198.74	199.83	A59	SEE CULVERT DESIGN TABLE						P08-1	65-D	825	199.94	6.9	0.3%	199.92	
									U107	SEE CULVERT DESIGN TABLE						CONTROL MH	701.011	1500	-	-	-	-	90mm ORIFICE INV. 199.92m 1.50m WIDE WEIR CREST ELEV. 200.50m 200mm BACKWATER VALVE INV, 198.98m
									U106	SEE CULVERT DESIGN TABLE						P08-2	65-D	825	199.92	26.6	0.3%	199.84	

NOTE:
1) CLASS "B" BEDDING FOR PIPES.

NO.	DATE	REVISIONS	BY	CHK	LEAD. DISC.	PROJ. MAN.
A	19/01/25	90% SUBMISSION TO CA				

SCALE :

CONSULTANT	NAME (PRINT)	INIT.	DATE
DESIGNED	JUAN LOPEZ	J.L.	
DRAWN	JAMIE HUANG	J.H.	
CHECKED	JUAN LOPEZ	J.L.	
APPROVED LEAD ENGINEER	JUAN LOPEZ	J.L.	
APPROVED PROJ. MANAGER	PETER BAMFORTH	P.B.	

Ontario

link427
LOCAL | INTEGRATED | NEIGHBOURLY | KNOWLEDGEABLE

TITLE
HWY 427 EXPANSION
STORMWATER MANAGEMENT
FACILITY TABLE PACKAGE 8

PROJECT ID.	STAGE INDENTIFIER	DESIGN PACKAGE NUMBER	DISCIPLINE	STRUCTURE NUMBER	DOCUMENT TYPE	DRAWING NUMBER	REVISION NUMBER
H427-D	N	8	WAT	000	DWG	2208	A